Intel® Server Chassis SR1475 / Intel® Server System SR1475NH1-E

Technical Product Specification

Intel order number D54566-001

Revision 1.0

March 2006

Enterprise Platforms and Services Marketing

Revision History

Date	Revision Number	Modifications
March 2006	1.0	Initial Release

Disclaimers

Information in this document is provided in connection with Intel® products. No license, express or implied, by estoppel or otherwise, to any intellectual property rights is granted by this document. Except as provided in Intel's Terms and Conditions of Sale for such products, Intel assumes no liability whatsoever, and Intel disclaims any express or implied warranty, relating to sale and/or use of Intel products including liability or warranties relating to fitness for a particular purpose, merchantability, or infringement of any patent, copyright or other intellectual property right. Intel products are not intended for use in medical, life saving, or life sustaining applications. Intel may make changes to specifications and product descriptions at any time, without notice.

Designers must not rely on the absence or characteristics of any features or instructions marked "reserved" or "undefined." Intel reserves these for future definition and shall have no responsibility whatsoever for conflicts or incompatibilities arising from future changes to them.

This document contains information on products in the design phase of development. Do not finalize a design with this information. Revised information will be published when the product is available. Verify with your local sales office that you have the latest datasheet before finalizing a design.

The Intel® Server Chassis SR1475 and Intel® Server System SR1475NH1-E may contain design defects or errors known as errata which may cause the product to deviate from published specifications. Current characterized errata are available on request.

This document and the software described in it is furnished under license and may only be used or copied in accordance with the terms of the license. The information in this manual is furnished for informational use only, is subject to change without notice, and should not be construed as a commitment by Intel Corporation. Intel Corporation assumes no responsibility or liability for any errors or inaccuracies that may appear in this document or any software that may be provided in association with this document.

Except as permitted by such license, no part of this document may be reproduced, stored in a retrieval system, or transmitted in any form or by any means without the express written consent of Intel Corporation.

Intel, Pentium, Celeron and Xeon are trademarks or registered trademarks of Intel Corporation.

*Other brands and names may be claimed as the property of others.

Copyright © Intel Corporation 2006.

Table of Contents

1. Intel® Server Chassis SR1475 Feature Summary ..... - 13 -

1.1 Chassis Views ..... - 13 -

1.2 Chassis Dimensions ..... - 14 -

1.3 Intel® Server Chassis SR1475 System Components ..... - 14 -

1.4 Rear Panel Components ..... - 15 -

1.5 Hard Drive and Peripheral Bays ..... - 15 -

1.6 Control Panel ..... - 16 -

1.7 Power Sub-system ..... - 18 -

1.8 System Cooling ..... - 18 -

1.9 Chassis Security ..... - 18 -

1.10 Rack and Cabinet Mounting Options ..... - 18 -

1.11 Front Bezels ..... - 18 -

2. Cooling Sub-System ..... - 20 -

2.1 System Fans ..... - 21 -

2.2 Power Supply Fans ..... - 22 -

2.3 CPU/Memory Air Duct and Side Air Baffle ..... - 22 -

3. Peripheral and Hard Drive Support ..... - 24 -

3.1 Slim-line Drive Bay ..... - 24 -

3.1.1 Floppy Drive Support With or Without Backplane Present ..... - 25 -

3.1.2 Optional Floppy Drive Configuration ..... - 26 -

3.1.3 CD-ROM or DVD-CDR Drive Use With or Without Backplane Present ..... - 26 -

3.2 Hard Disk Drive Bays ..... - 28 -

3.2.1 Hot-Swap Hard Disk Drive Trays ..... - 28 -

3.2.2 Fixed Drive Trays ..... - 29 -

3.2.3 Drive Blanks ..... - 29 -

3.3 Hot-Swap SCSI Backplane ..... - 30 -

3.3.1 SCSI Backplane Board Layout ..... - 30 -

3.3.2 SCSI Backplane Functional Architecture ..... - 31 -

3.3.3 SCSI Backplane Connector Definitions ..... - 34 -

3.4 Hot-Swap SATA Backplane ..... - 37 -

3.4.1 SATA Backplane Layout ..... - 38 -

3.4.2 SATA Backplane Functional Architecture ..... - 39 -

3.4.3 SATA Backplane Connector Definitions ..... - 41 -

4. Standard Control Panel ..... - 44 -

4.1 Standard Control Panel Buttons ....- 44 -
4.2 Standard Control Panel LED Indicators ....- 45 -
4.2.1 Power / Sleep LED ....- 46 -
4.2.2 Drive Activity LED ....- 46 -
4.2.3 System Identification LED ....- 47 -
4.3 Control Panel Connectors ....- 47 -
4.4 Internal Control Panel Assembly Headers ....- 47 -
5. PCI Riser Cards and Assembly ....- 49 -
5.1 Riser Card Options ....- 50 -
6. Power Sub-system ....- 51 -
6.1 Mechanical Specifications ....- 51 -
6.2 Airflow Requirements ....- 52 -
6.3 Acoustics ....- 52 -
6.4 Temperature ....- 53 -
6.5 Output Connectors ....- 53 -
6.5.1 P1 Main power connector ....- 54 -
6.5.2 P2 Processor Power Connector ....- 54 -
6.5.3 HD Power Connector (P3) ....- 55 -
6.5.4 Slim-line Power Connector (P4) ....- 55 -
6.6 AC Inlet Connector ....- 55 -
6.7 Marking and Identification ....- 55 -
6.8 AC Input Voltage ....- 56 -
6.9 AC Line Transient Specification ....- 56 -
6.10 Susceptibility ....- 57 -
6.10.1 Electrostatic Discharge Susceptibility ....- 57 -
6.10.2 Fast Transient/Burst ....- 57 -
6.10.3 Radiated Immunity ....- 57 -
6.10.4 Surge Immunity ....- 57 -
6.11 AC Line Fast Transient (EFT) Specification ....- 58 -
6.12 AC Line Dropout / Holdup ....- 58 -
6.12.1 AC Line 5VSB Holdup ....- 58 -
6.13 Power Recovery ....- 58 -
6.13.1 Voltage Brown Out ....- 59 -
6.13.2 Voltage Interruptions ....- 59 -
6.14 AC Line Inrush ....- 59 -
6.15 AC Line Isolation Requirements ....- 59 -
6.16 AC Line Leakage Current ....- 59 -

6.17 AC Line Fuse ..... - 60 -
6.18 Power Factor Correction ..... - 60 -
6.19 Efficiency ..... - 60 -
6.20 Grounding ..... - 60 -
6.21 Remote Sense ..... - 60 -
6.22 Output Power / Currents ..... - 61 -
6.22.1 Standby Outputs ..... - 61 -
6.22.2 Fan Operation in Stand-By Mode ..... - 61 -
6.23 Voltage Regulation ..... - 61 -
6.23.1 Dynamic Loading ..... - 62 -
6.24 Capacitive Loading ..... - 62 -
6.25 Closed loop stability ..... - 62 -
6.26 Common Mode Noise ..... - 63 -
6.27 Ripple / Noise ..... - 63 -
6.28 Soft Starting ..... - 63 -
6.29 Zero Load Stability Requirements ..... - 63 -
6.30 Timing Requirements ..... - 63 -
6.31 Residual Voltage Immunity in Standby mode ..... - 66 -
6.32 Protection Circuits ..... - 66 -
6.33 Over-Current Limit (OCP) ..... - 67 -
6.34 Over-Voltage Protection (OVP) ..... - 67 -
6.35 Over-Temperature Protection (OTP) ..... - 68 -
6.36 Control and Indicator Functions ..... - 68 -
6.37 PSON# Input Signal ..... - 68 -
6.38 PWOK (Power OK) Output Signal ..... - 69 -
6.39 Environmental Requirements ..... - 70 -
6.39.1 Temperature ..... - 70 -
6.39.2 Humidity ..... - 70 -
6.39.3 Altitude ..... - 70 -
6.39.4 Mechanical Shock ..... - 70 -
6.39.5 Random Vibration ..... - 70 -
6.39.6 Thermal Shock (Shipping) ..... - 70 -
6.39.7 Ecological Requirements ..... - 70 -
6.39.8 Catastrophic Failure ..... - 70 -
7. Electromagnetic Compatibility ..... - 71 -
7.1 EMI ..... - 71 -
7.2 Input Line Current Harmonic Content (PFC) ..... - 71 -

7.3 Magnetic Leakage Fields ..... - 72 -
7.4 Voltage Fluctuations and Flicker ..... - 72 -
7.5 Reliability / Warranty / Service ..... - 72 -
7.5.1 Component De-rating ..... - 72 -
7.5.2 Component Life requirement ..... - 72 -
7.6 Mean Time Between Failures (MTBF) ..... - 72 -
7.6.1 Warranty Period ..... - 72 -
7.6.2 Serviceability ..... - 73 -
7.7 Power Supply Returned for Repair ..... - 73 -
7.8 Modifications / Change Control ..... - 73 -
7.9 Power Supply Compliance Overview ..... - 73 -
7.10 Power Supplies Compliance Information ..... - 74 -
7.11 EMC Compliance Information ..... - 74 -
7.12 Immunity Compliance Information ..... - 75 -
7.13 Harmonics & Voltage Flicker Compliance Information ..... - 75 -
7.14 Environmental / Ecology Compliance Information ..... - 75 -
7.15 Other Safety Requirement Notations ..... - 76 -
7.15.1 Certification Conditions ..... - 76 -
7.15.2 Isolation Between Primary - Secondary ..... - 76 -
7.15.3 Creepage & Clearance Requirements ..... - 76 -
7.15.4 Leakage Current Maximums ..... - 76 -
7.15.5 Max Surface Temperatures ..... - 76 -
7.15.6 Date Coded Serial Numbers ..... - 76 -
7.15.7 Power Input Electrical Ratings ..... - 76 -
7.15.8 Maximum Allowable Temperatures on Inlet Receptacles ..... - 76 -
7.15.9 Maximum Allowable Temperatures on Power Cords ..... - 76 -
8. Supported Intel® Server Boards ..... - 77 -
8.1 Intel® Server Board SE7230NH1-E Feature Set ..... - 77 -
9. Regulatory, Environmentals, and Specifications ..... - 80 -
9.1 Product Regulatory Compliance ..... - 80 -
9.1.1 Product Safety Compliance ..... - 80 -
9.1.2 Product EMC Compliance ..... - 80 -
9.1.3 Product Regulatory Compliance Markings ..... - 81 -
9.2 Electromagnetic Compatibility Notices ..... - 81 -
9.2.1 USA ..... - 81 -
9.2.2 FCC Verification Statement ..... - 82 -
9.2.3 ICES-003 (Canada) ..... - 82 -

9.2.4 Europe (CE Declaration of Conformity) ....- 82 -
9.2.5 Japan EMC Compatibility ....- 83 -
9.2.6 BSMI (Taiwan) ....- 83 -
9.3 Replacing the Back up Battery ....- 84 -
9.4 System Level Environmental Limits ....- 85 -
9.5 Serviceability ....- 85 -
Appendix A: Intel® Server Chassis SR1475 Integration and Usage Tips ....- 3 -
Glossary ....- 4 -

List of Figures

Figure 1. Front Chassis View with Bezel ....- 13 -
Figure 2. Front Chassis View without Bezel ....- 13 -
Figure 3. Rear Chassis View ....- 13 -
Figure 4. Major Chassis Components....- 14 -
Figure 5. Back Panel Feature Overview ....- 15 -
Figure 6. Front Panel Feature Overview....- 16 -
Figure 7. Control Panel Module ....- 17 -
Figure 8. Standard Control Panel Overview ....- 17 -
Figure 9. Optional Front Bezel ....- 19 -
Figure 10. Front Bezel Options ....- 19 -
Figure 11. Intel® Server Chassis SR1475 Cooling Subsystem ....- 20 -
Figure 12. Intel® Server Chassis SR1475 System Fans 4, 5, 6, 7, 8 ....- 21 -
Figure 13. Intel® Server System SE7230NH1-E System Fan Headers 4, 5, 6, 7, 8 ....- 21 -
Figure 14. Air Baffle ....- 22 -
Figure 15. CPU/Memory Air Duct ....- 23 -
Figure 16. Intel® Server Chassis SR1475 Peripheral Bay Configuration Options....- 24 -
Figure 17. View of Slim-line Drive Bay....- 24 -
Figure 18. Optional Floppy Drive Configuration....- 26 -
Figure 19. Hard Disk Drive Bay ....- 28 -
Figure 20. Hard Drive Tray Assembly....- 29 -
Figure 21. Drive Tray with Drive Blank ....- 29 -
Figure 22. SCSI Backplane Layout....- 30 -
Figure 23. SCSI Backplane Functional Diagram ....- 31 -
Figure 24. Intel® Server Chassis SR1475 SCSI HSBP I2C Bus Connection Diagram ....- 33 -
Figure 25. 68-Pin SCSI Cable Connector ....- 34 -
Figure 26. 80-pin SCA2 SCSI Interface ....- 36 -
Figure 27. SATA Backplane Layout....- 38 -
Figure 28. SATA Backplane Layout....- 38 -
Figure 29. SATA Backplane Functional Block Diagram....- 39 -
Figure 30. Intel® Server Chassis SR1475 SATA HSBP I2C Bus Connection Diagram ....- 40 -
Figure 31. Standard Control Panel Assembly Module ....- 44 -
Figure 32. Standard Control Panel Buttons ....- 44 -
Figure 34. PCI Riser Bracket and Optional PCI-X* and PCI Express* Risers ....- 49 -
Figure 35. 1U Full Height PCI-X* Riser Card Mechanical Drawing....- 50 -

Figure 36. 1U Full Height PCI Express* Riser Card Mechanical Drawing .....- 50 -
Figure 37. Power Supply Enclosure Drawing .....- 51 -
Figure 38. Airflow Characteristics .....- 52 -
Figure 39. Output Voltage Timing .....- 64 -
Figure 40. Turn On/Off Timing (Power Supply Signals).....- 66 -
Figure 41. PSON# Required Signal Characteristic. .....- 69 -
Figure 42. SE7230NH1-E (LX) Board Layout .....- 78 -

List of Tables

Table 1. Chassis Dimensions ..... - 14 -
Table 2. Major Chassis Components ..... - 15 -
Table 3. Individual Fan Assembly Pin-out (J5J1, J4J1, J4J3, J4J2) ..... - 22 -
Table 4. 4-pin Floppy Power Connector Pin-out (J3) ..... - 25 -
Table 5. 34-pin Floppy Connector Pin-out (J2) ..... - 25 -
Table 6. 50-pin CD-ROM Connector Pin-out (J6) ..... - 26 -
Table 7. 4-pin CD-ROM Power Connector Pin-out (J5) ..... - 27 -
Table 8. 40-pin CD-ROM Connector Pin-out (J1) ..... - 27 -
Table 9. SCSI Backplane Power Connector Pin-out (J1) ..... - 34 -
Table 10. UltraWide (SE) and Ultra2 (LVD) Ultra320 SCSI Connector Pin-out (J8) ..... - 35 -
Table 11. 80-pin SCA2 SCSI Interface Pin-out ..... - 36 -
Table 12. LED Function ..... - 41 -
Table 13. SATA Backplane Power Connector Pin-out ..... - 41 -
Table 14. 7-Pin SATA Connector Pin-out (J2, J3, J4, J5, J6) ..... - 42 -
Table 15. 22-Pin SATA Connector Pin-out ..... - 42 -
Table 16. Standard Control Panel Button Functions ..... - 45 -
Table 17. Standard Control Panel LED Functions ..... - 46 -
Table 18. SSI Power LED Operation ..... - 46 -
Table 19. External USB Connector (J2) ..... - 47 -
Table 20. 50-pin Control Panel Connector (J3) ..... - 48 -
Table 21. Internal USB Header (J9F2) ..... - 48 -
Table 22. Acoustic Requirements ..... - 53 -
Table 23. Environmental Requirements ..... - 53 -
Table 24. Cable Lengths ..... - 53 -
Table 25. P1 Main Power Connector ..... - 54 -
Table 26. P2 Processor Power Connector ..... - 54 -
Table 27. HD Power Connector ..... - 55 -
Table 28. Slim-line Power Connector ..... - 55 -
Table 29. AC Input Rating ..... - 56 -
Table 30. AC Line Sag Transient Performance ..... - 56 -
Table 31. AC Line Surge Transient Performance ..... - 57 -
Table 32. Performance Criteria ..... - 57 -
Table 33. Dropout Criteria ..... - 58 -
Table 34. Load Ratings ..... - 61 -

Table 35. Voltage Regulation Limits ..... - 61 -
Table 36. Transient Load Requirements ..... - 62 -
Table 37. Capacitve Loading Conditions ..... - 62 -
Table 38. Ripple and Noise ..... - 63 -
Table 39. Output Voltage Timing ..... - 64 -
Table 40. Turn On/Off Timing ..... - 65 -
Table 41. Over Current Protection (OCP) ..... - 67 -
Table 42. Over-Voltage Protection (OVP) Limits ..... - 67 -
Table 43. PSON# Signal Characteristic ..... - 68 -
Table 44. PWOK Signal Characteristics ..... - 69 -
Table 45. Harmonic Limits, Class A equipment ..... - 71 -
Table 46: Baseboard Layout Reference ..... - 79 -
Table 47. System Office Environment Summary ..... - 85 -
Table 48. Mean Time To Repair Estimate ..... - 86 -

1. Intel® Server Chassis SR1475 Feature Summary

The Intel® Server Chassis SR1475 is a 1U server chassis specifically designed to support the Intel® Server Board SE7230NH1-E. The Intel® Server Chassis SR1475 is available as a standalone chassis solution from Intel, and as an integrated system. The Intel® Server System SR1475NH1-E consists of the Intel® Server Board SE7230NH1-E integrated into the Intel® Server Chassis SR1475. The server board and the server chassis have feature sets designed to support the high-density server market.

The Intel® Server Board SE7230NH1-E is available in two different configurations, the SE7230NH1LC version and the SE7230NH1LX version. Only the SE7230NH1LX version is available for integration into the Intel® Server Chassis SR1475, and all references to the Intel® Server Board SE7230NH1-E in this document refers to the SE7230NH1LX version of the server board. This document provides details on the server chassis feature set and technical specifications. For technical details related to the Intel® Server Board SE7230NH1-E, please refer to the Intel® Server Board SE7230NH1-E Technical Product Specification.

1.1 Chassis Views

Figure 1. Front Chassis View with Bezel

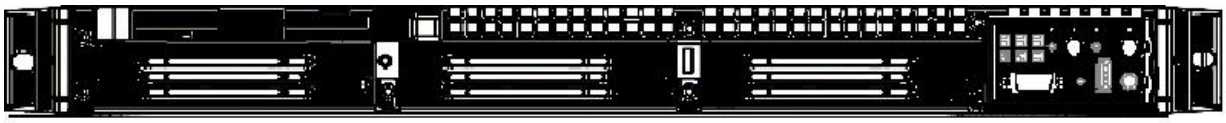

Figure 2. Front Chassis View without Bezel

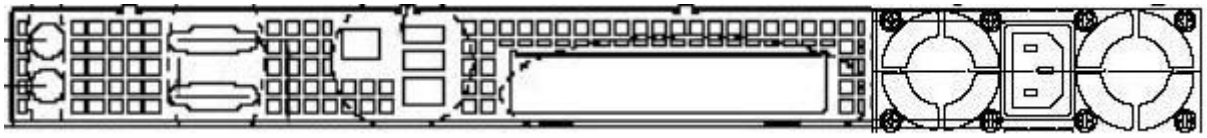

Figure 3. Rear Chassis View

1.2 Chassis Dimensions

Table 1. Chassis Dimensions

Height	43.25 mm	1.703”
Width	430 mm	16.930”
Depth	672 mm	26.457”
Max. Weight	14.1 kg	31 LBS

1.3 Intel® Server Chassis SR1475 System Components

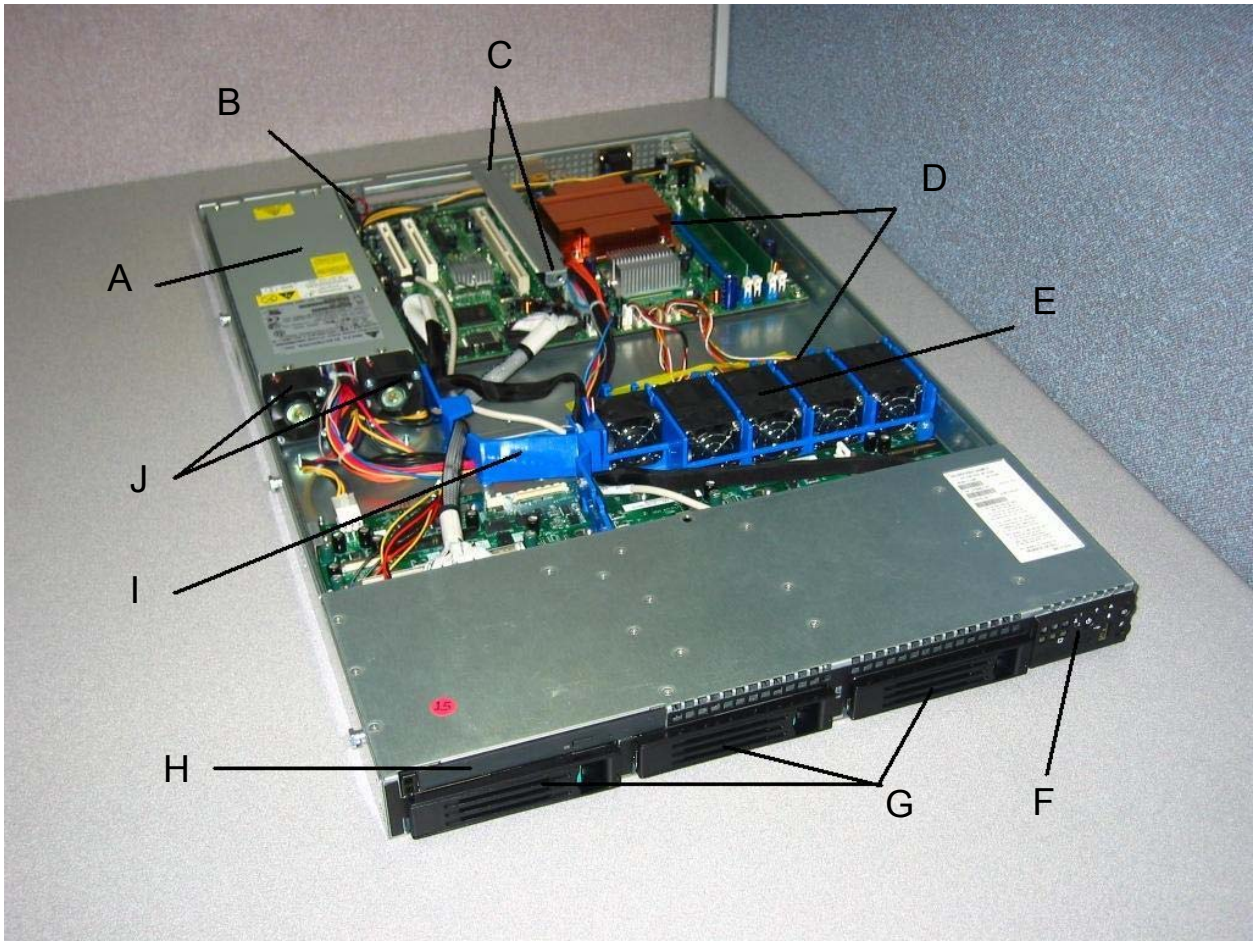

Figure 4. Major Chassis Components

Table 2. Major Chassis Components

A	Power Supply	F	Control Panel
B	Chassis Intrusion Switch	G	Hard Drive Bays
C	PCI Riser Card Assembly Placement	H	Slim-line Drive Bay
D	CPU Air Duct Placement	I	PS / Electronics Bay Isolation Air Baffle
E	System Fan Module	J	Power Supply Fans

1.4 Rear Panel Components

On the back of the chassis are cutouts for all external I/O connectors found on the server board. The I/O connector locations are pre-cut, so the use of an I/O shield is not required.

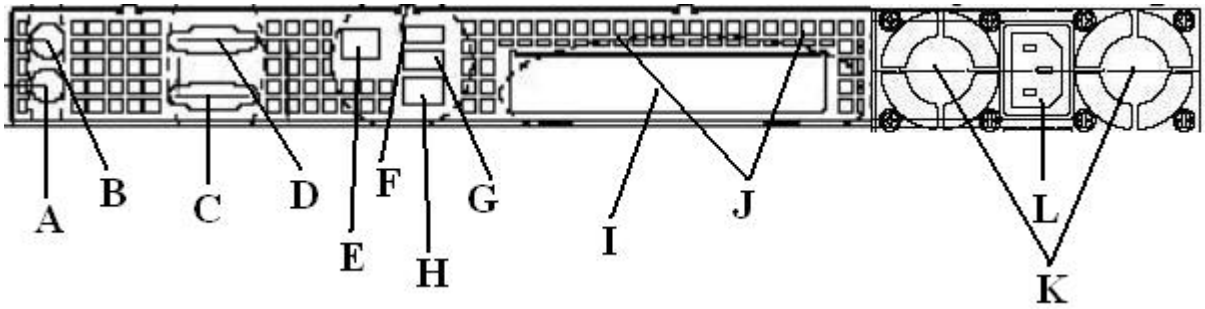

A	PS2 keyboard connector	G	USB 2 connector
B	PS2 mouse connector	H	NIC 1 connector (RJ45)
C	Serial port A connector (DB9)	I	PCI card bracket (full-height)
D	Video connector	J	Rear chassis venting holes
E	NIC 2 connector (RJ45)	K	Power Supply fans
F	USB 1 connector	L	AC Power Receptacle

Figure 5. Back Panel Feature Overview

1.5 Hard Drive and Peripheral Bays

The server chassis is designed to support several different hard drive and peripheral configurations. The hard drive bay is designed to support up to three fixed SATA or SCSI drives, or three hot-swappable SATA or SCSI drives. SATA and SCSI hot-swap configurations require an orderable accessory kit which includes the necessary cables, drive trays and backplane. Reference the Intel® Server Chassis SR1400 Spares/Parts and Configuration List for detailed accessory information.

The slim-line peripheral bay is capable of supporting any of the following slim-line devices: CD-ROM drive, DVD Drive, DVD/CDR Drive, or floppy drive. If both a CD-ROM or DVD/CDR and floppy drive are required, an optional kit is available to convert the first 1” hard drive bay to a floppy drive bay. The kit includes the necessary cables and slim-line floppy drive mounting tray.

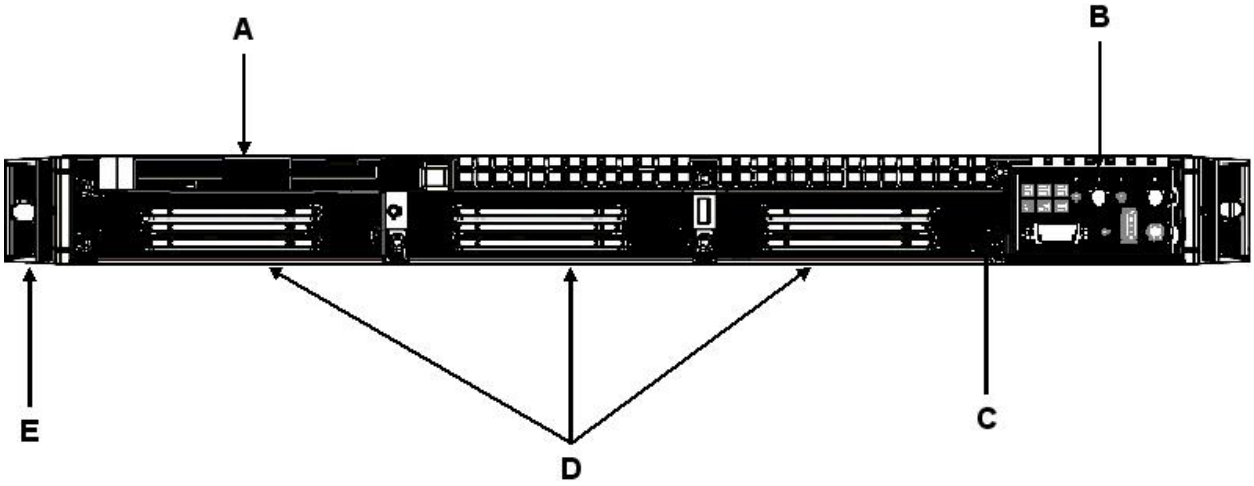

Figure 6. Front Panel Feature Overview

A	Slim-line drive bay (CD-ROM or DVD/CDR or Floppy)
B	Control Panel
C	Hard Drive Fault/Activity LED
D	1” Hard Drive Bays
E	Chassis Handle

1.6 Control Panel

The server chassis control panel assembly is pre-assembled and modular in design. The entire module assembly slides into a predefined slot in the front of the chassis.

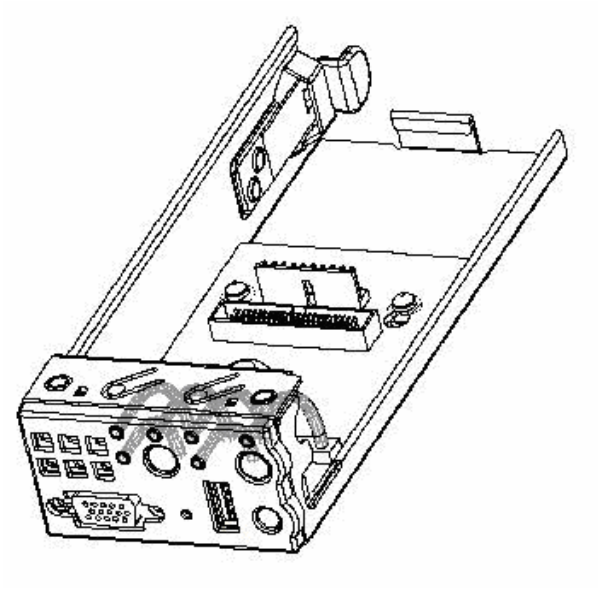

Figure 7. Control Panel Module

The control panel supports several push buttons and status LEDs, and includes USB and video ports to centralize system control, monitoring, and accessibility to within a common compact design. The following diagram overviews the layout and functions of the control panel.

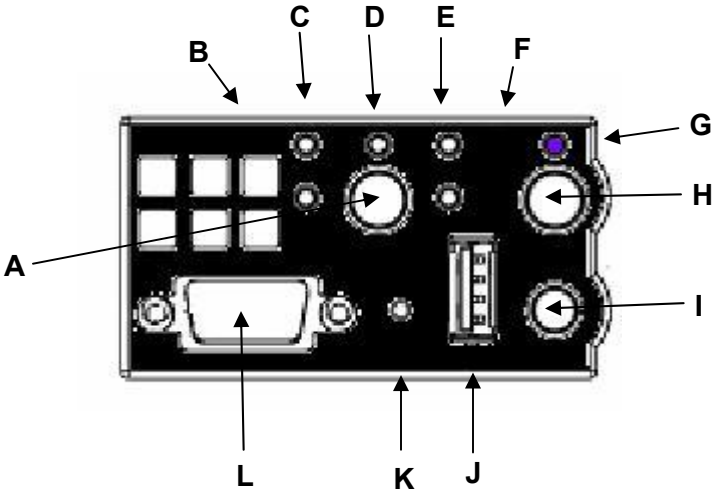

Figure 8. Standard Control Panel Overview

A	Power / Sleep Button	G	System Identification LED
B	NIC #2 Activity LED	H	System Identification Button
C	NIC #1 Activity LED	I	System Reset Button
D	Power / Sleep LED	J	USB 2.0 Connector
E	Not Used	K	Recessed NMI Button (Tool Required)
F	Hard Drive Activity LED	L	Video connector (not supported on SR1475)

1.7 Power Sub-system

The power sub-system of the server chassis consists of a single non-redundant 350 W power supply (PS) and provides several integrated management features including:

- Status LED
- Over-temperature protection circuitry
- Over-voltage protection circuitry

The power supply operates within the following voltage ranges and ratings: 100-127VAC (V) ~ at 50/60 Hertz (Hz), 6 Ampere (A) maximum (max); 200-240VAC~ at 50/60 Hz, 3 A maximum.

1.8 System Cooling

The server chassis provides non-redundant system fans and dual non-redundant power supply fans to provide sufficient air flow for fixed and hot-swap drive configurations, processors, memory, and an add-in card, when external ambient temperatures remain within specified limits.

1.9 Chassis Security

The server chassis provides support for several system security features including a lockable front bezel, chassis intrusion switch, and a Kensington* style lock attach point.

1.10 Rack and Cabinet Mounting Options

The server chassis was designed to support 19” wide by up to 24”-30” deep server cabinets. The chassis can be configured to support either a relay rack / cabinet mount kit that can be configured to support both 2-post racks and 4-post cabinets; or a tool-less sliding rail kit that is used to mount the chassis into a standard (19” by up to 30” deep) EIA-310D compatible server cabinet.

1.11 Front Bezels

The optional front bezel is made of molded plastic and uses a snap-on design. When installed, its design allows for maximum airflow.

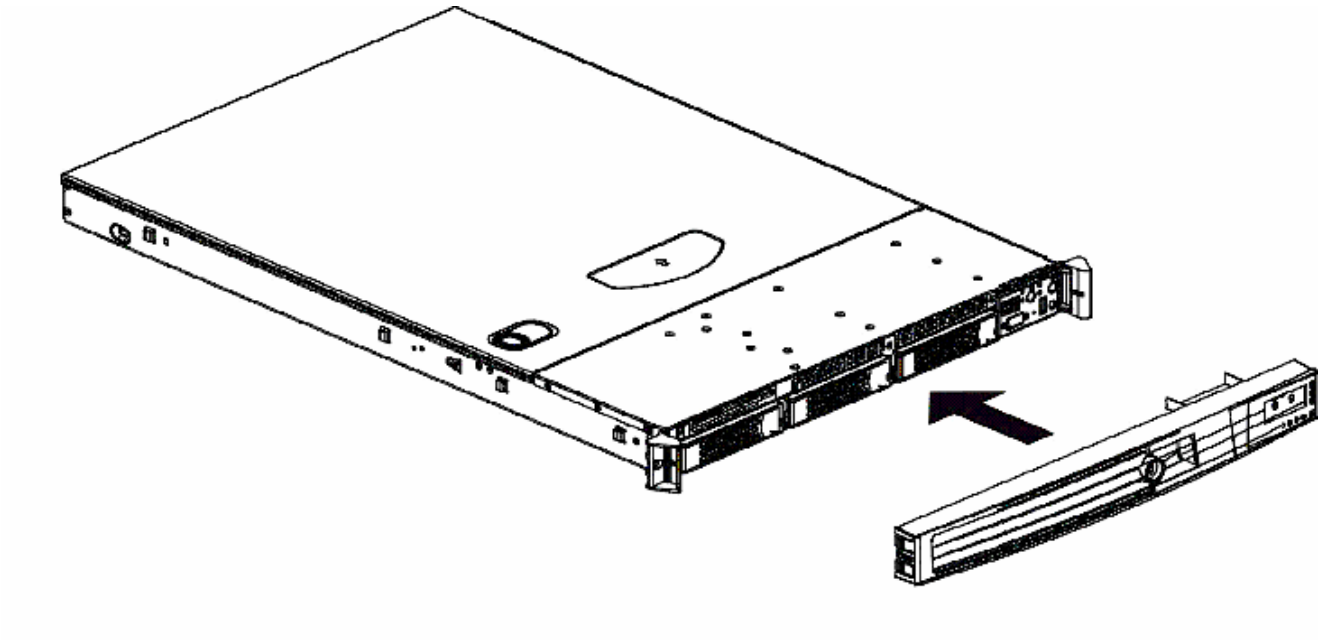

Figure 9. Optional Front Bezel

Light pipes in the front bezel supporting the standard control panel allow the system status LEDs to be monitored with the bezel installed

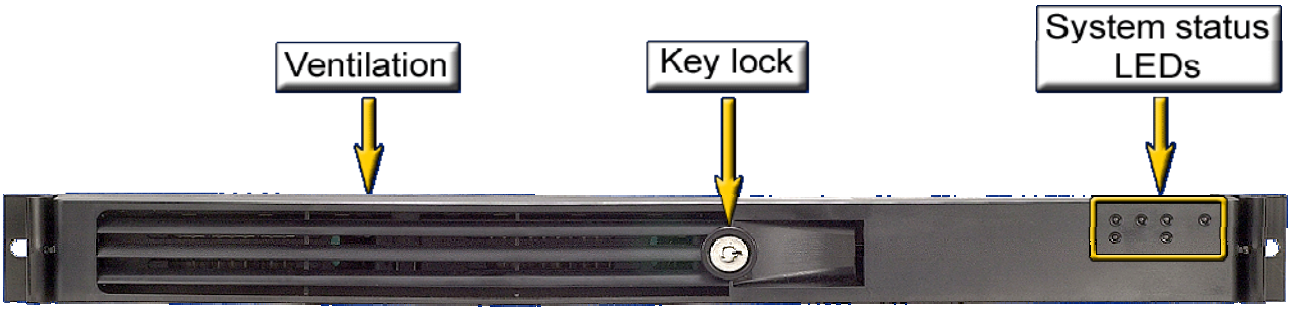

Figure 10. Front Bezel Options

2. Cooling Sub-System

The cooling sub-system on the server chassis is compromised of four 40x40x56mm dual rotor fans, one 40x40x28mm single rotor fan, two 40x40x28mm power supply fans, a CPU/memory air duct, and a PS/electronics bay isolation air baffle, to provide the necessary cooling and airflow to the system. A fan on the processor heat sink is not necessary in this chassis. In order to maintain the necessary airflow within the system, the air baffle, CPU/memory air duct, and the top cover need to be properly installed.

Note: The Intel® Server Chassis SR1475 does not support redundant cooling. Should a fan fail, the system should be brought down as soon as possible to replace the failed fan.

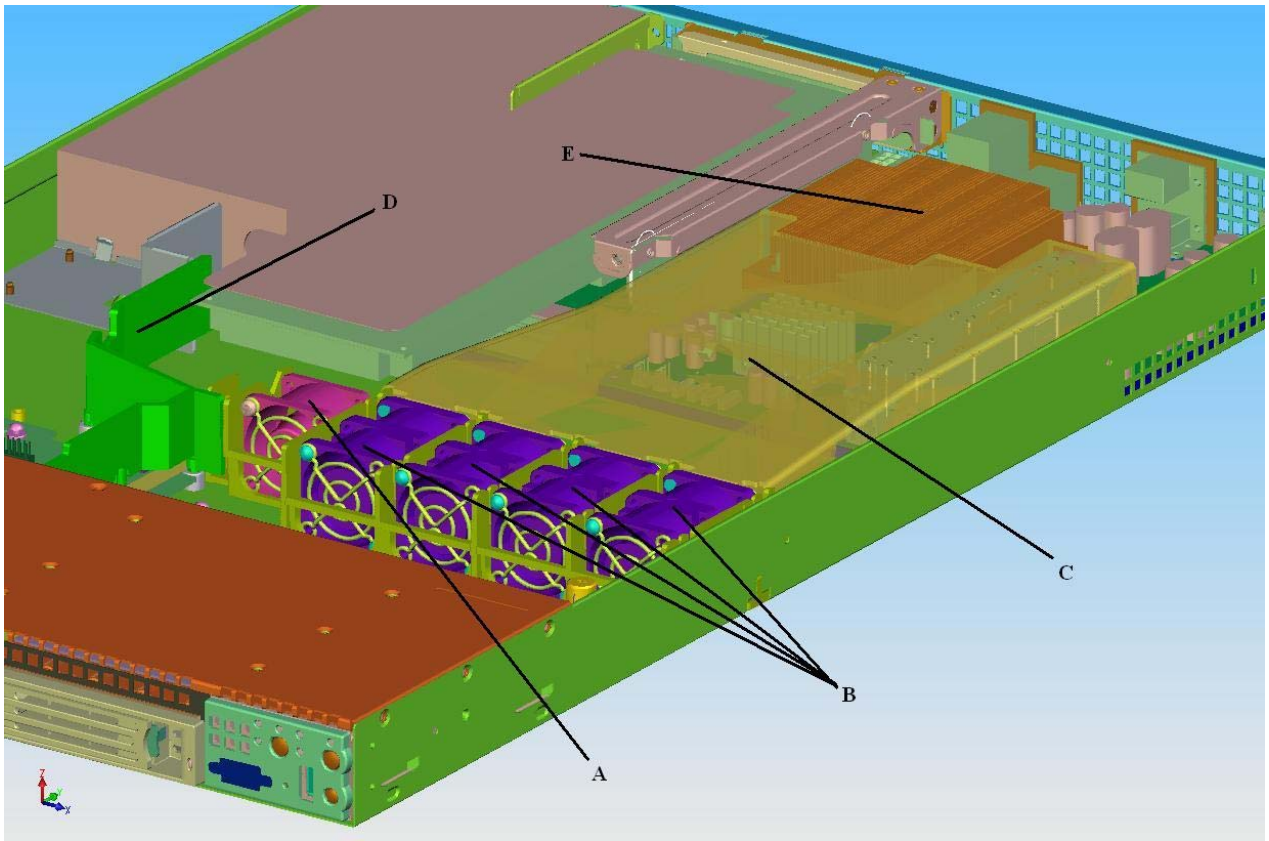

Figure 11. Intel® Server Chassis SR1475 Cooling Subsystem

A	System Fan #4	D	Air Baffle
B	Fans 5, 6, 7, 8	E	Processor Heat Sink
C	CPU / Memory Air Duct		

2.1 System Fans

The server chassis system fans consist of four 40x40x56mm dual rotor and one 40x40x28mm single rotor multi-speed fans, which provide the primary airflow for the system. The four dual rotor fans provide the primary cooling for the processor, GMCH, and memory components on the Intel® Server Board SE7230NH1-E. The single rotor fan provides the primary cooling for a PCI add-in card, the ICH7R, and the PXH chipset components.

Removal and insertion of individual fans is a tool-less operation, and provides for ease of installation and serviceability of the server chassis cooling subsystem. The individual fans are not hot-swappable. The server must be turned off and power removed from the system before any of the fans can safely be replaced.

Each dual rotor fan has an 8-pin wire harness which connects to the system fan headers 5, 6, 7 and 8 on the server board. These are shown, from left to right, in the following figure. Each fan harness provides power and tachometer lines allowing the fans to be monitored independently by server management software.

Figure 12. Intel® Server Chassis SR1475 System Fans 4, 5, 6, 7, 8

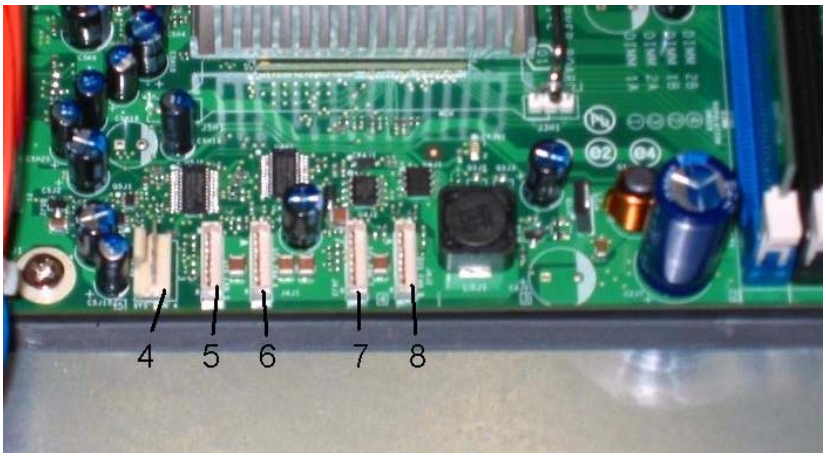

Figure 13. Intel® Server System SE7230NH1-E System Fan Headers 4, 5, 6, 7, 8

The following table provides the pin-outs for each dual rotor fan header.

Table 3. Individual Fan Assembly Pin-out (J5J1, J4J1, J4J3, J4J2)

Pin	Signal Name	Description
1	FAN_SPEED_CNTL2	Control the fan speed
2	FAN_FAIL	FAN_TACH signal
3	GND	Power Supply Ground
4	Reserved	Reserved
5	GND	Power Supply Ground
6	GND	Power Supply Ground
7	FAN_FAIL	FAN_TACH signal
8	Fan speed control	Variable Speed Fan Power

The single rotor fan has a standard 3 or 4-pin SSI fan header that connects directly to the server board system fan header #4 (J5J2).

Each fan within the module is capable of supporting multiple speeds. If the internal ambient temperature of the system exceeds the value programmed into the fan control via BIOS, the system will automatically increase the rotational speed for all the fans within fan module.

Note: There is no fan redundancy. Should a fan fail, the system should be shut down as soon as possible to have the fan replaced. The system fans are not hot-swapable.

2.2 Power Supply Fans

The power supply supports two non-redundant 40mm fans. They are responsible for the cooling of the power supply and drive bay 1 (the far left hard drive as viewed from the front of the chassis).

2.3 CPU/Memory Air Duct and Side Air Baffle

The chassis requires the use of a CPU/memory air duct and power supply / electronics bay isolation air baffle to direct airflow and sustain appropriate air pressure.

An air baffle is used to isolate the airflow of the two power supply fans from that of the system fan module. The baffle is mounted into three stand-offs with one end fitting under the back edge of the hard drive bay

Figure 14. Air Baffle

The CPU/memory air duct must be properly installed to direct airflow through the processor heatsink and the memory area of the system.

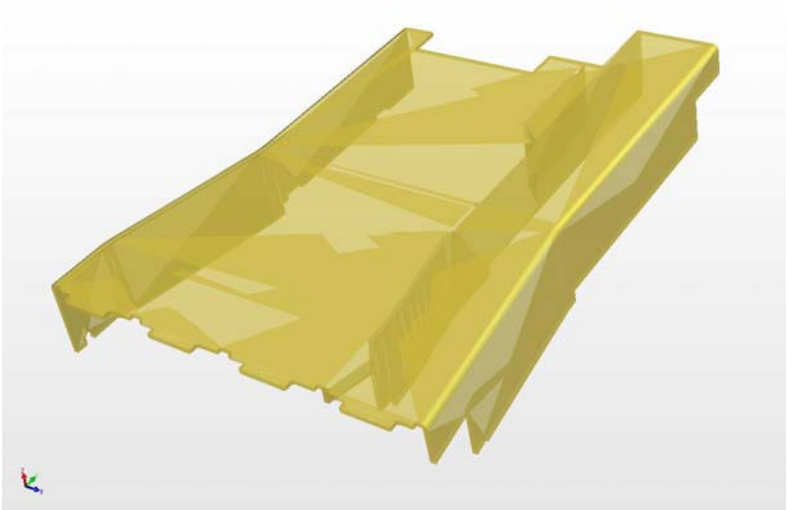

Figure 15. CPU/Memory Air Duct

Notes:

1. If the CPU/memory air duct is removed, the system will not meet the thermal cooling requirements of the processor, which will most likely result in degraded performance as a result of throttling or thermal shutdown of the system.

2. Once the air dam is removed from the CPU air duct, it cannot be reinstalled.

3. Peripheral and Hard Drive Support

The server chassis provides three hard drive bays and one slim-line peripheral drive bay at the front of the chassis. The drive bays are designed to support both fixed and hot-swap SCSI and SATA drive configurations.

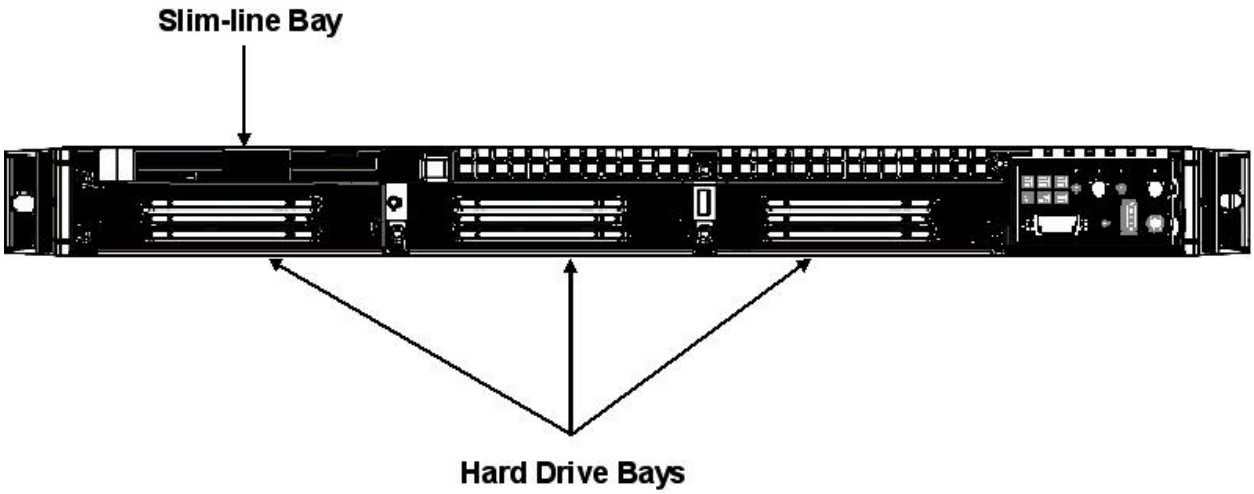

Figure 16. Intel® Server Chassis SR1475 Peripheral Bay Configuration Options

3.1 Slim-line Drive Bay

The chassis provides a slim-line drive bay that can be configured for either CD-ROM, DVD/CDRW, or floppy drives, with or without the presence of a backplane. Regardless of whether a SATA or SCSI backplane is present, all slim-line devices attach directly to the Intel® Server Board SE7230NH1-E.

Note: The 100-pin connector on the SATA and SCSI backplane is not used in the Intel® Server Chassis SR1475 and the Intel® Server Board SE7230NH1-E.

Drives are mounted on a tool-less tray which allows for easy installation into and removal from the chassis. The slim-line devices are not hot-swappable.

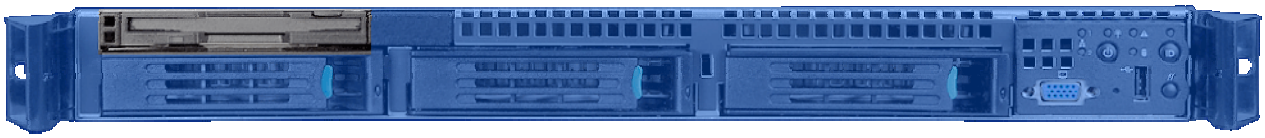

Figure 17. View of Slim-line Drive Bay

3.1.1 Floppy Drive Support With or Without Backplane Present

The floppy drive is mated with an interposer card which provides the power and IO interconnects between the drive, power supply, and the server board.

Note: The 100-pin connector on the backplane is not used with the Intel® Server Board SE7230NH1-E.

The interposer card has three connectors. The first connector has 28 pins and is cabled directly to the drive. The second connector has 4 pins and is cabled to the 2x3 pin power lead from the power supply; this connector has the following pin-out.

Table 4. 4-pin Floppy Power Connector Pin-out (J3)

Pin	Name
1	P12V
2	GND
3	GND
4	P5V

The power cable for the floppy drive is provided via a slim-line Y cable which comes with the Intel® Server Chassis SR1475. The third connector has 34 pins and is cabled to the legacy floppy connector on the server board; this connector has the following pin-out.

Table 5. 34-pin Floppy Connector Pin-out (J2)

Name	Pin	Pin	Name
GND	1	2	FD_DENSEL0
GND	3	4	2M_MEDIA
GND	5	6	FD_DRATE0_L
GND	7	8	FD_INDEX_L
GND	9	10	FD_MTR0_L
GND	11	12	FD_DS1_L
GND	13	14	FD_DS0_L
GND	15	16	FD_MTR1_L
Unused	17	18	FD_DIR_L
GND	19	20	FD_STEP_L
GND	21	22	FD_WDATA_L
GND	23	24	FD_WGATE_L
GND	25	26	FD_TRK0_L
Unused	27	28	FD_WP_L
GND_FDD	29	30	FD_RDATA_L
GND	31	32	FD_HDSEL_L
MSEN0	33	34	FD_DSKCHG_L

3.1.2 Optional Floppy Drive Configuration

For system configurations that require a CD-ROM or DVD-CDR and floppy drive, where using a USB floppy or USB CD-ROM is not desired, an accessory kit which consists of a slim-line floppy drive tray and face plate can be used to install a floppy drive into the hard drive bay directly beneath the slim-line drive bay a shown in the following diagram.

Figure 18. Optional Floppy Drive Configuration

3.1.3 CD-ROM or DVD-CDR Drive Use With or Without Backplane Present

The slim-line CD-ROM or DVD-CDR drive is mated with an interposer card which provides the power and IO interconnects between the drive, power supply and the server board. The interposer card has three connectors. The first connector has 50 pins and is plugged directly into the drive connector; the connector has the following pin-out.

Table 6. 50-pin CD-ROM Connector Pin-out (J6)

Name	Pin	Pin	Name
RSV_LCM	1	2	RSV_RCM
RSV_GND	3	4	GND
RST_IDE_S_L	5	6	IDE_SDD<8>
IDE_SDD<7>	7	8	IDE_SDD<9>
IDE_SDD<6>	9	10	IDE_SDD<10>
IDE_SDD<5>	11	12	IDE_SDD<11>
IDE_SDD<4>	13	14	IDE_SDD<12>
IDE_SDD<3>	15	16	IDE_SDD<13>
IDE_SDD<2>	17	18	IDE_SDD<14>
IDE_SDD<1>	19	20	IDE_SDD<15>
IDE_SDD<0>	21	22	IDE_SDDREQ
GND	23	24	IDE_SDIOR_L
IDE_SDIOW_L	25	26	GND
IDE_SIORDY	27	28	IDE_SDDACK_L
IRQ_IDE_S	29	30	NC_IDEIO16_L
IDE_SDA<1>	31	32	NC_CBL_DET_S
IDE_SDA<0>	33	34	IDE_SDA<2>
IDE_SDCS0_L	35	36	IDE_SDCS1_L
IDE_SEC_HD_ACT_L	37	38	P5V
P5V	39	40	P5V
P5V	41	42	P5V
GND	43	44	GND
GND	45	46	GND
IDEP_ALE_H	47	48	GND
	49	50	
		52	Unused (50 pin or 52 pin)

The second connector has 4 pins and is cabled to the 2x3 pin power lead from the power supply. The power cable for the drive is included in the Intel® Server Chassis SR1475 in the form of a Y power cable. Both ends of the Y cable are necessary when a slim-line CD/DVD is used in conjunction with a floppy installed in the hard drive bay. Both ends of this cable are identical and have the following pin-out.

Table 7. 4-pin CD-ROM Power Connector Pin-out (J5)

Pin	Name
1	P12V
2	GND
3	GND
4	P5V

The third connector has 40 pins and is cabled to the legacy IDE connector on the server board. This connector has the following pin-out.

Table 8. 40-pin CD-ROM Connector Pin-out (J1)

Name	Pin	Pin	Name
RST_IDE_S_L	1	2	GND
IDE_SDD<7>	3	4	IDE_SDD<8>
IDE_SDD<6>	5	6	IDE_SDD<9>
IDE_SDD<5>	7	8	IDE_SDD<10>
IDE_SDD<4>	9	10	IDE_SDD<11>
IDE_SDD<3>	11	12	IDE_SDD<12>
IDE_SDD<2>	13	14	IDE_SDD<13>
IDE_SDD<1>	15	16	IDE_SDD<14>
IDE_SDD<0>	17	18	IDE_SDD<15>
GND	19	20	Unused
IDE_SDDREQ	21	22	GND
IDE_SDIOW_L	23	24	GND
IDE_SDIOR_L	25	26	GND
IDE_SIORDY	27	28	IDEP_ALE_H
IDE_SDDACK_L	29	30	GND
IDE_IDE_S	31	32	NC_IDEIO16_L
IDE_SDA<1>	33	34	IDE_CBL_DET_S
IDE_SDA<0>	35	36	IDE_SDA<2>
IDE_SDCS0_L	37	38	IDE_SDCS1_L
IDE_SEC_HD_ACT_L	39	40	GND

3.2 Hard Disk Drive Bays

The server chassis can be configured to support either fixed or hot-swap SCSI or SATA hard drive configurations. For hot-swap drive configurations, 3.5” x 1” hard disk drives are mounted to hot-swap drive trays for easy insertion to or extraction from the drive bay. For fixed drive configurations, the hard disk drives are mounted to a drive tray which is only removable from inside the chassis.

Note: All hard drive bays must be populated to maintain system thermals. Drive trays should either have a hard drive or drive blank inserted.

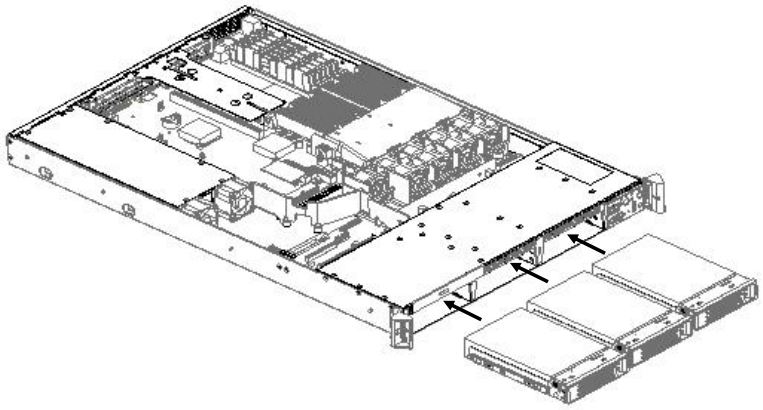

Figure 19. Hard Disk Drive Bay

3.2.1 Hot-Swap Hard Disk Drive Trays

In a hot-swap configuration, each hard drive must be mounted to a hot-swap drive tray, making insertion and extraction of the drive from the chassis very simple. Each drive tray has its own dual purpose latching mechanism which is used to both insert and extract drives from the chassis and lock the tray in place. Each drive tray supports a light pipe providing a drive status indicator, located on the backplane, that is viewable from the front of the chassis.

Note: Depending on the controller used, SATA hard disk drives may not report errors using the drive’s status indicator.

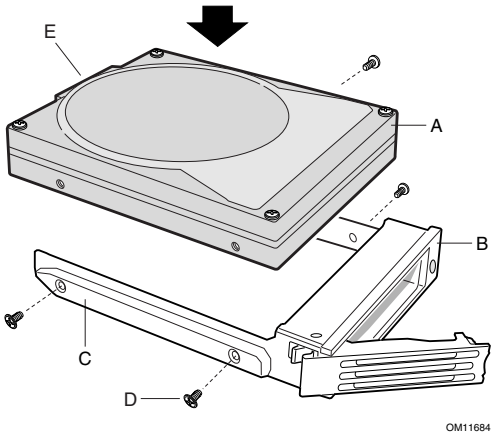

Figure 20. Hard Drive Tray Assembly

A. Hard Drive
B. Drive Carrier
C. Side Rail
D. Mounting Screw
E. Hard Drive Connector

3.2.2 Fixed Drive Trays

In a fixed drive configuration, each SATA/SCSI hard drive must be mounted to a non-hot-swap drive tray. The tray is designed to slide into the drive bay and lock into place. To remove the drive, the chassis top cover must be removed to disengage the drive tray latch from the bay.

3.2.3 Drive Blanks

Drive blanks must be used when no drive is used in a hard drive bay. Drive blanks simulate the spatial volume of a hard disk which is required to maintain proper air pressure limits necessary to cool the system.

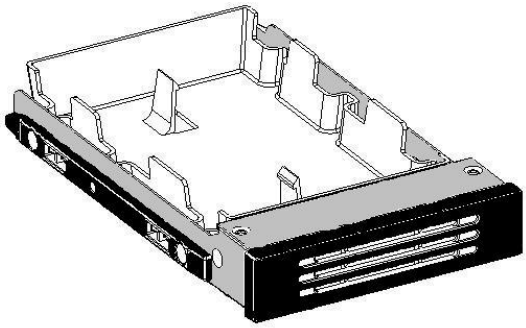

Figure 21. Drive Tray with Drive Blank

3.3 Hot-Swap SCSI Backplane

The Intel® Server Chassis SR1475 SCSI hot-swap backplane (HSBP) supports the following feature set:

- QLogic* GEM359 enclosure management controller
  - External non-volatile Flash ROM
  - I^2C interface
  - Low Voltage Differential (LVD) SCSI Interface
  - SCSI-3 compatible
  - Compliance with SCSI Accessed Fault Tolerant Enclosures (SAF-TE) specification, version 1.00 and addendum
- Support for up to three U320 LVD SCSI Drives
  - Onboard LVD SCSI Termination – SPI-4 compatible
- Hard drive status LEDs
- One 2x3-pin power connector

3.3.1 SCSI Backplane Board Layout

The following diagram shows the layout of the major components and connectors on the board.

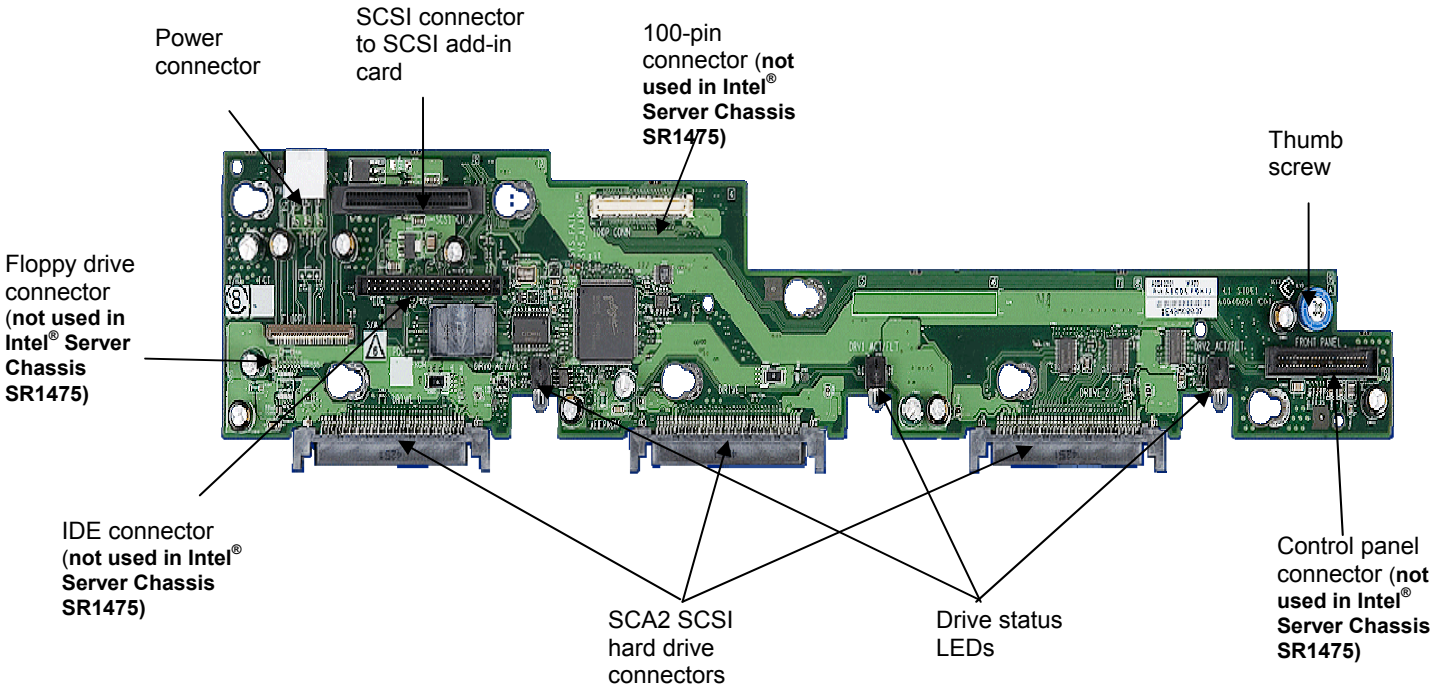

Figure 22. SCSI Backplane Layout

3.3.2 SCSI Backplane Functional Architecture

This section provides a high-level description of the functionality distributed between the architectural blocks of the SCSI backplane. The following figure shows the functional blocks of the SCSI backplane.

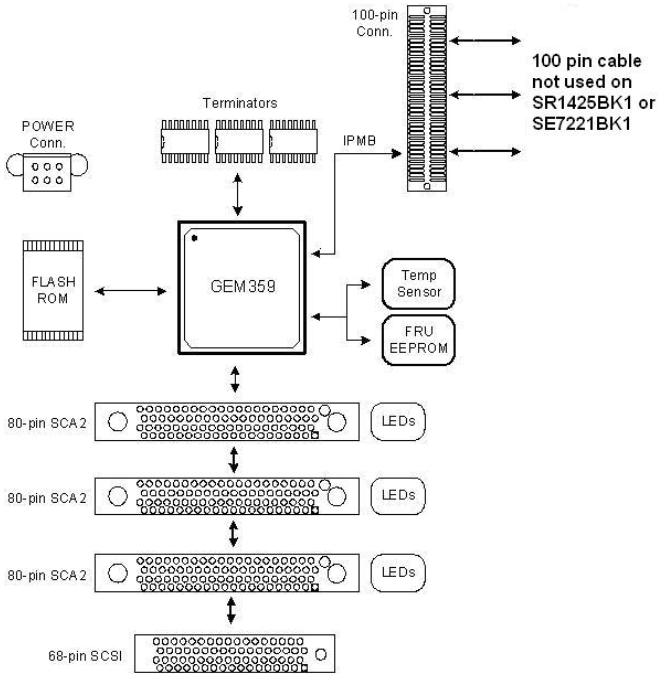

Figure 23. SCSI Backplane Functional Diagram

3.3.2.1 Enclosure Management Controller

The SCSI backplane utilizes the features of the QLogic* GEM359 for enclosure management which monitors various aspects of a storage enclosure. The chip provides in-band SAF-TE and SES management through the SCSI interface. Also supported is the I2C connection to the server board.

The GEM359 comes in a 144-pin low profile Quad Flat Pack package and operates from 3.3V and an input clock frequency of 10MHz. It has general input and output pins that allow customization, some of which are used for drive detection and power controller enable/disable functionality.

3.3.2.2 SCSI Interface

The GEM359 supports LVD SCSI operation through 8-bit asynchronous SCSI data transfers. The following SCSI command set is supported:

- Inquiry
- Read Buffer
- Write Buffer
- Test Unit Ready
- Request Sense
- Send Diagnostic
- Receive Diagnostic

The GEM359 supports the following SAF-TE command set:

- Read Enclosure Configuration
- Read Enclosure Status
- Red Device Slot Status
- Read Global Flags
- Write Device Slot Status
- Perform Slot Operation

3.3.2.3 I2C Serial Bus Interface

The GEM359 supports two independent I2C interface ports with bus speeds of up to 400Kbits. The I2C core incorporates 8-bit FIFOs for data transfer buffering. The Intelligent Platform Management Bus (IPMB) is supported through I2C port 1.

The following figure provides a block diagram of the I2C bus connection implemented on the SCSI backplane.

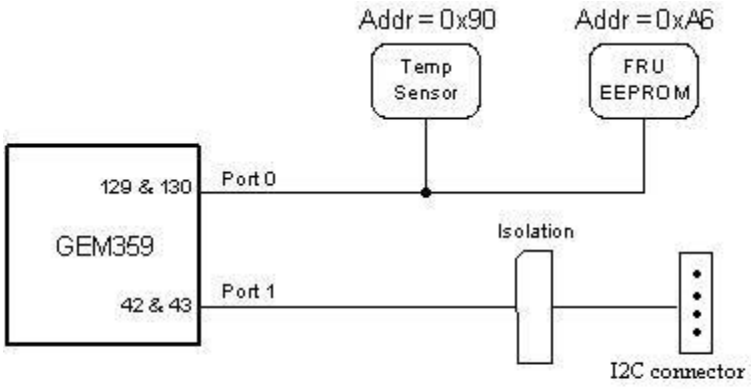

Figure 24. Intel® Server Chassis SR1475 SCSI HSBP I2C Bus Connection Diagram

3.3.2.4 External Memory Device

The SCSI backplane contains a non-volatile 16K top boot block, 4Mbit Flash memory device that stores the configuration data and operating firmware executed by the GEM359's internal CPU.

The Flash memory operates off the 3.3V rail and is housed in a 48-pin TSOP type 1 package.

3.3.2.5 LED Support

The SCSI backplane contains a green activity LED and a yellow fault LED for each of the three hard drive connectors. The SCSI HDD drives the activity LED whenever the drive is accessed. The GEM359 controller drives the fault LED whenever an error condition is detected.

3.3.3 SCSI Backplane Connector Definitions

As a multi-functional board, several connectors can be found on the SCSI backplane. This section defines the purpose and pin-out associated with each connector.

3.3.3.1 Power Connector (Backplane to Power Supply Harness)

The SCSI backplane provides power to the three drive bays, supporting up to three hard disk drives, and the slim-line drive bay, supporting one floppy drive or CD-ROM drive. A 6-pin power cable is routed from the power distribution board and plugs into a 2 x 3 shrouded plastic PC power connector on the SCSI backplane. The following table shows the power connector pin-out.

Table 9. SCSI Backplane Power Connector Pin-out (J1)

Pin	Name	Pin	Name
1	GND	4	P12V
2	GND	5	P12V
3	P5V	6	P5V_STBY

3.3.3.2 SCSI Connector (Backplane to SCSI Add-in Card)

A 68-pin SCSI cable is used to interface the SCSI backplane with an add-in PCI SCSI controller installed on the PCI riser card.

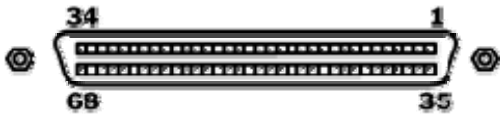

Figure 25. 68-Pin SCSI Cable Connector

Table 10. UltraWide (SE) and Ultra2 (LVD) Ultra320 SCSI Connector Pin-out (J8)

Name	Pin	Pin	Name
BP_SCSI_D12P	A1	B1	BP_SCSI_D12N
BP_SCSI_D13P	A2	B2	BP_SCSI_D13N
BP_SCSI_D14P	A3	B3	BP_SCSI_D14N
BP_SCSI_D15P	A4	B4	BP_SCSI_D15N
BP_SCSI_DP1P	A5	B5	BP_SCSI_DP1N
BP_SCSI_D0P	A6	B6	BP_SCSI_D0N
BP_SCSI_D1P	A7	B7	BP_SCSI_D1N
BP_SCSI_D2P	A8	B8	BP_SCSI_D2N
BP_SCSI_D3P	A9	B9	BP_SCSI_D3N
BP_SCSI_D4P	A10	B10	BP_SCSI_D4N
BP_SCSI_D5P	A11	B11	BP_SCSI_D5N
BP_SCSI_D6P	A12	B12	BP_SCSI_D6N
BP_SCSI_D7P	A13	B13	BP_SCSI_D7N
BP_SCSI_DP0P	A14	B14	BP_SCSI_DP0N
GND	A15	B15	GND
BP_SCSI_DIFSNS	A16	B16	GND
TERMI_PWR	A17	B17	TERMI_PWR
TERMI_PWR	A18	B18	TERMI_PWR
Unused	A19	B19	Unused
GND	A20	B20	GND
BP_SCSI_ATNP	A21	B21	BP_SCSI_ATNN
GND	A22	B22	GND
BP_SCSI_BSYP	A23	B23	BP_SCSI_BSYN
BP_SCSI_ACKP	A24	B24	BP_SCSI_ACKN
BP_SCSI_RSTP	A25	B25	BP_SCSI_RSTN
BP_SCSI_MSGP	A26	B26	BP_SCSI_MSGN
BP_SCSI_SELP	A27	B27	BP_SCSI_SELN
BP_SCSI_CDP	A28	B28	BP_SCSI_CDN
BP_SCSI_REQP	A29	B29	BP_SCSI_REQN
BP_SCSI_IOP	A30	B30	BP_SCSI_ION
BP_SCSI_D8P	A31	B31	BP_SCSI_D8N
BP_SCSI_D9P	A32	B32	BP_SCSI_D9N
BP_SCSI_D10P	A33	B33	BP_SCSI_D10N
BP_SCSI_D11P	A34	B34	BP_SCSI_D11N

3.3.3.3 SCA2 Hot-Swap SCSI Drive Connectors

The SCSI backplane provides three hot-swap SCA2 connectors, which provide power and SCSI signals using a single connector. Each SCA drive attaches to the backplane using one of these connectors.

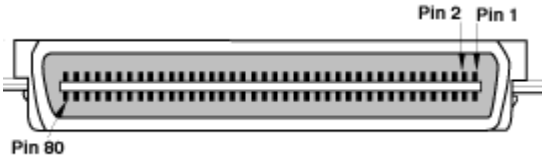

Figure 26. 80-pin SCA2 SCSI Interface

Table 11. 80-pin SCA2 SCSI Interface Pin-out

Signal Name	Pin	Pin	Signal Name
GND	41	1	P12V
GND	42	2	P12V
GND	43	3	P12V
SCSI_MATED	44	4	P12V
NC_3V_CHG	45	5	NC_3V_1
BP_SCSI_DIFSNS	46	6	NC_3V_2
BP_SCSI_D11P	47	7	BP_SCSI_D11N
BP_SCSI_D10P	48	8	BP_SCSI_D10N
BP_SCSI_D9P	49	9	BP_SCSI_D9N
BP_SCSI_D8P	50	10	BP_SCSI_D8N
BP_SCSI_IOP	51	11	BP_SCSI_ION
BP_SCSI_REQP	52	12	BP_SCSI_REQN
BP_SCSI_CDP	53	13	BP_SCSI_CDN
BP_SCSI_SELP	54	14	BP_SCSI_SELN
BP_SCSI_MSGP	55	15	BP_SCSI_MSGN
BP_SCSI_RSTP	56	16	BP_SCSI_RSTN
BP_SCSI_ACKP	57	17	BP_SCSI_ACKN
BP_SCSI_BSYP	58	18	BP_SCSI_BSYN
BP_SCSI_ATNP	59	19	BP_SCSI_ATNN
BP_SCSI_DP0P	60	20	BP_SCSI_DP0N
BP_SCSI_D7P	61	21	BP_SCSI_D7N
BP_SCSI_D6P	62	22	BP_SCSI_D6N
BP_SCSI_D5P	63	23	BP_SCSI_D5N
BP_SCSI_D4P	64	24	BP_SCSI_D4N
BP_SCSI_D3P	65	25	BP_SCSI_D3N
BP_SCSI_D2P	66	26	BP_SCSI_D2N
BP_SCSI_D1P	67	27	BP_SCSI_D1N
BP_SCSI_D0P	68	28	BP_SCSI_D0N
BP_SCSI_DP1P	69	29	BP_SCSI_DP1N
BP_SCSI_D15P	70	30	BP_SCSI_D15N

Signal Name	Pin	Pin	Signal Name
BP_SCSI_D14P	71	31	BP_SCSI_D14N
BP_SCSI_D13P	72	32	BP_SCSI_D13N
BP_SCSI_D12P	73	33	BP_SCSI_D12N
SCSI_MATED	74	34	P5V
GND	75	35	P5V
GND	76	36	P5V
HD_ACT_LED_L	77	37	Unused
Unused	78	38	GND
Unused	79	39	Unused
Unused	80	40	Unused
GND	B2	B1	GND

3.4 Hot-Swap SATA Backplane

The Intel® Server Chassis SR1475 SATA hot-swap backplane (HSBP) supports the following feature set:

- QLogic* GEM424 enclosure management controller
  - External non-volatile SEEPROMs
  - SATA and SATA-II extension compatible
  - Compliance with SATA Accessed Fault Tolerant Enclosures (SAF-TE) specification, version 1.00 and addendum
  - Compliance with Intelligent Platform Management Interface 1.5 (IPMI)
- Support for up to three SATA drives
- Hot-Swap drive support
- One 2 x 3-pin power connector
- IDE Connector provided for slim-line CD-ROM or DVD support
- Drive Status LEDs

3.4.1 SATA Backplane Layout

The SATA backplane is located on the backside of the hot-swap drive bays on the inside of the chassis. Stand-offs on the chassis and a single thumb screw make for easy tool-less installation. The following diagram shows the layout of the major components and connectors of the board.

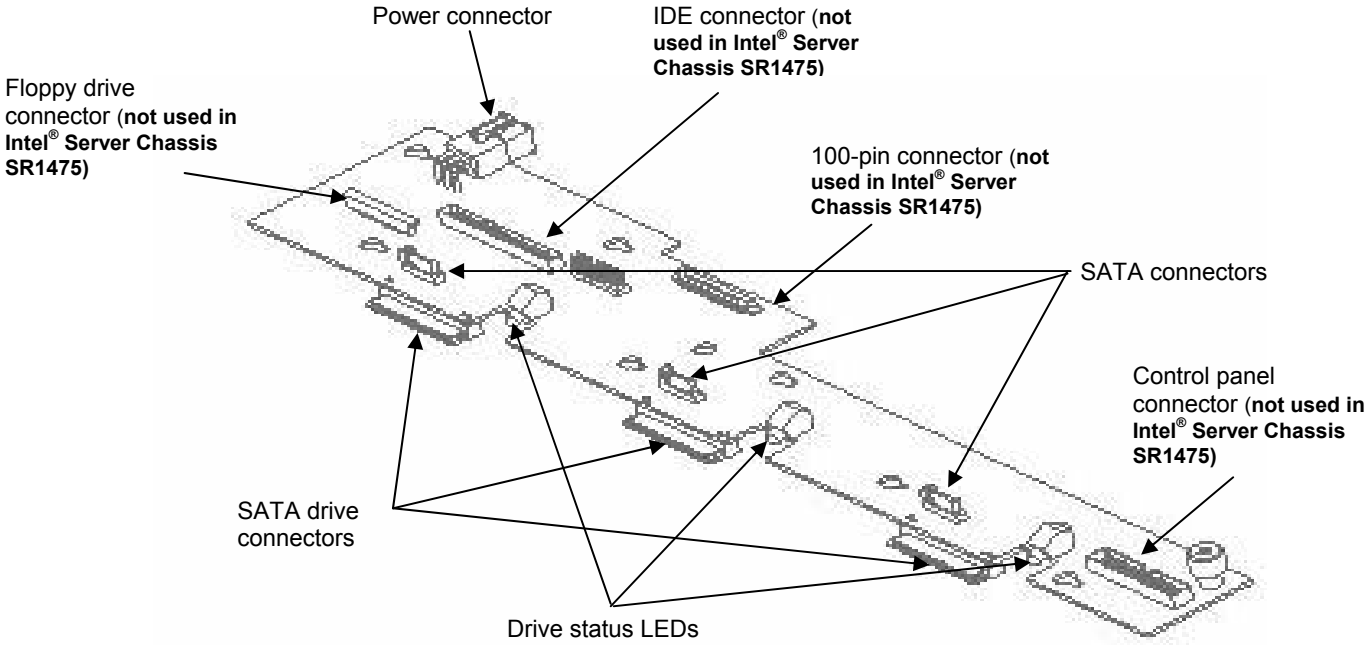

Figure 28. SATA Backplane Layout

3.4.2 SATA Backplane Functional Architecture

This section provides a high-level description of the functionality distributed between the architectural blocks of the SATA backplane. The following figure shows the functional blocks of the SATA backplane.

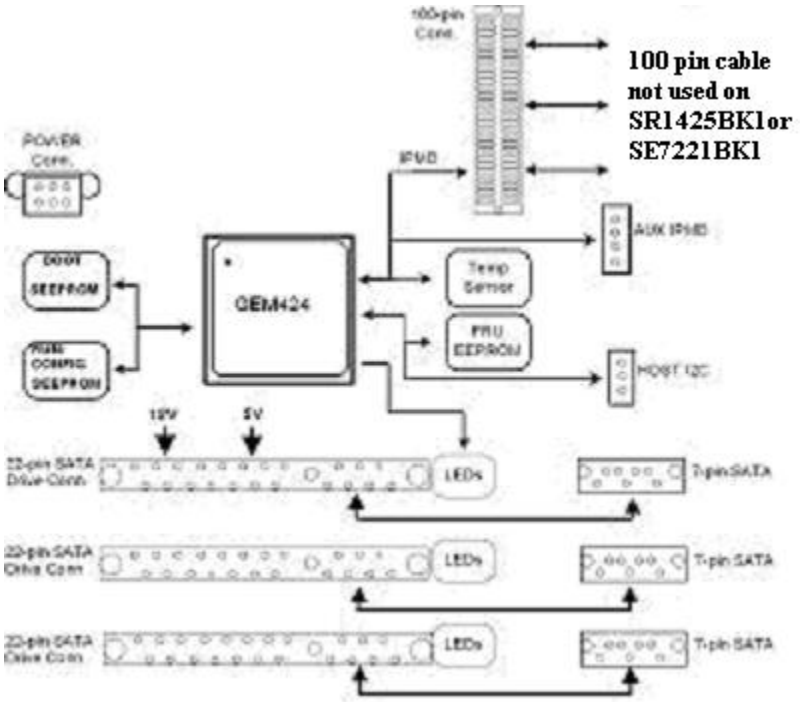

Figure 29. SATA Backplane Functional Block Diagram

3.4.2.1 Enclosure Management Controller

The SATA backplane utilizes the features and functionality of the QLogic* GEM424 enclosure management controller, which is capable of monitoring various aspects of a storage enclosure. The chip provides in-band SAF-TE management through the SATA Host I2C interface.

The GEM424 comes in an 80-pin Thin Quad Flat Pack (TQFP) package and operates from 3.3V and an input clock frequency of 20MHz. It has general input and output pins that are used for hardware drive detection and driving fault and activity LEDs.

3.4.2.2 SATA Interface

The GEM424 implements SAF-TE over the HBA I2C interface. The GEM424 supports the following SAF-TE command set:

- Read Enclosure Configuration
- Read Enclosure Status
- Read Device Slot Status
- Read Global Flags
- Write Device Slot Status
- Perform Slot Operation

3.4.2.2.1 I2C Serial Bus Interface

The GEM424 supports two independent I2C interface ports with bus speeds of up to 400Kbits. The I2C core incorporates 8-bit FIFOs for data transfer buffering. The Intelligent Platform Management Bus (IPMB) is supported through I2C port 0.

The figure below provides a block diagram of I2C bus connection implemented on SATA backplane.

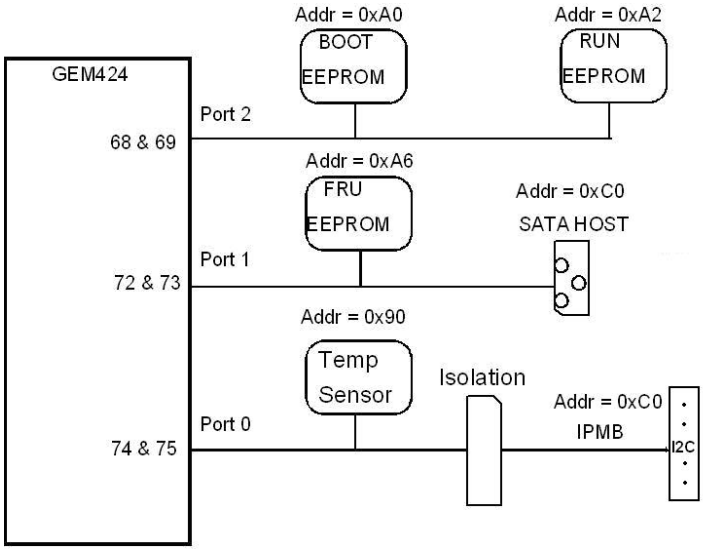

Figure 30. Intel® Server Chassis SR1475 SATA HSBP I2C Bus Connection Diagram

3.4.2.3 External Memory Device

The SATA backplane contains non-volatile 32K and 64K serial EEPROM devices for boot and run-time/configuration code storage respectively. These devices reside on the GEM424's private I2C bus.

The SEEPROMs operate off the 5.0V rail and are housed in 8-pin SOIC packages.

3.4.2.4 LED Support

The SATA backplane contains a green activity LED and an amber fault LED for each of the three hard drive connectors. The activity LED is driven by the GEM424 or, for drives that support the feature, by the SATA HDD whenever the drive is accessed. The fault LED is driven by the GEM424 controller whenever an error condition is detected, as defined by the firmware.

Activity and fault LED functions are only available when a SATA host controller that supports the SAF-TE protocol over I2C is connected to the SATA backplane via the SATA Host I2C connector, J2A3.

Table 12. LED Function

Status LED	Definition
Green ON	HDD Activity
Amber ON	HDD Fail
Amber Blinking	Rebuild in progress

3.4.3 SATA Backplane Connector Definitions

3.4.3.1 Power Connector

The SATA backplane provides power for up to three SATA drives, and one floppy drive or CD-ROM drive. A 6-pin power cable from the power supply harness is routed to the backplane and plugs into a 2x3 shrouded plastic PC power connector. The following table provides the connector pin-out.

Table 13. SATA Backplane Power Connector Pin-out

Pin	Name	Pin	Name
1	GND	4	P12V
2	GND	5	P12V
3	P5V	6	P5V_STBY

3.4.3.2 SATA Connectors (Backplane to Server Board)

The SATA backplane has three 7-pin SATA connectors (Drive0, Drive1 and Drive2). These connectors correspond to the SATA connectors on the Intel® Server Board SE7230NH1-E (SATA1, SATA2 and SATA3). The backplane connectors relay SATA signals from the server board to the SATA drives. Each connector is used for a separate SATA channel and is configured as a bus master. The following table provides the connector pin-out.

Table 14. 7-Pin SATA Connector Pin-out (J2, J3, J4, J5, J6)

Pin	Name
1	GND
2	DRV_RX_P
3	DRV_RX_N
4	GND
5	DRV_TX_P
6	DRV_TX_N
7	GND
8	GND
9	GND

3.4.3.3 Hot-Swap SATA Drive Connectors

The SATA drive interface combines both SATA and power signals into a single connector. The pin-out of the drive interface connector is the same as a standard SATA and power connector. The following table provides the pin-out.

Table 15. 22-Pin SATA Connector Pin-out

Name	Pin	Pin	Name
GND	1	13	GND
DRV_RX_P	2	14	SCSI+5V
DRV_RX_N	3	15	SCSI+5V
GND	4	16	SCSI+5V
DRV_TX_P	5	17	GND
DRV_TX_N	6	18	Unused
GND	7	19	GND
P3V3	8	20	SCSI+12V
P3V3	9	21	SCSI+12V
P3V3	10	22	SCSI+12V
GND	11	23	GND
GND	12	24	GND

3.4.3.4 Slim-line Floppy Drive Connector

With a slim-line floppy drive installed into either the slim-line drive bay or in one of the hard drive bays (using the optionally installed floppy drive kit), the floppy cable from the drive is routed to the legacy floppy connector on the server board.

3.4.3.5 Slim-line CD-ROM / DVD Interface Assembly

When a CD-ROM or DVD drive is installed into the slim-line peripheral bay, the drive cable is routed from a connector on the drive interposer card, to the server board legacy IDE connector.

4. Standard Control Panel

The standard control panel supports several push buttons and status LEDs, along with USB and video ports to centralize system control, monitoring, and accessibility to within a common compact design.

The control panel assembly comes pre-assembled and is modular in design. The control panel assembly module slides into a predefined slot on the front of the chassis. Once installed, communication to the server board can be achieved by either attaching a 50-pin cable to a hot-swap backplane, or if fixed drives are used, can be connected directly to the server board. In addition, a USB cable is routed to the USB port on the server board.

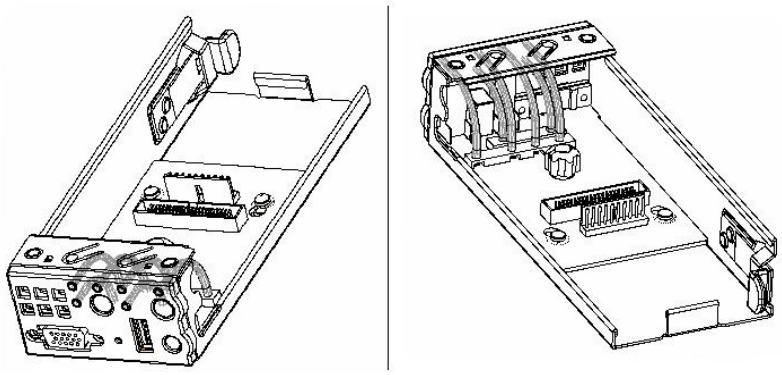

Figure 31. Standard Control Panel Assembly Module

4.1 Standard Control Panel Buttons

The standard control panel assembly houses several system control buttons. Each of their functions is listed in the table below.

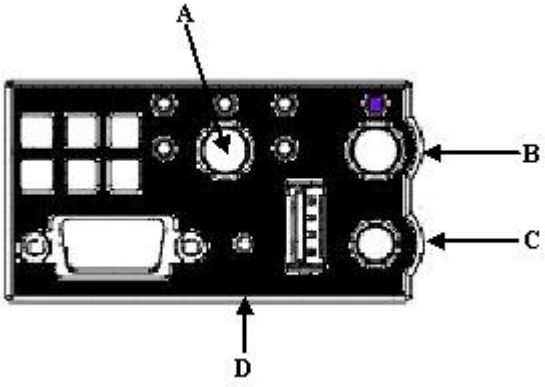

Figure 32. Standard Control Panel Buttons

Table 16. Standard Control Panel Button Functions

Reference	Feature	Function
A	Power / Sleep Button	Toggles the system power on/off. This button also functions as a Sleep Button if enabled by an ACPI-compliant operating system.
B	ID Button	Toggles the front panel ID LED and the baseboard ID LED on/off. The baseboard ID LED is visible through the rear of the chassis and allows you to locate the server you're working on from behind a rack of servers.
C	Reset Button	Reboots and initializes the system.
D	NMI Button	Pressing the recessed button with a paper clip or pin puts the server in a halt state for diagnostic purposes and allows you to issue a non-maskable interrupt. After issuing the interrupt, a memory download can be performed to determine the cause of the problem.

4.2 Standard Control Panel LED Indicators

The standard control panel houses six LEDs, which are viewable with or without the front bezel to display the system's operating state.

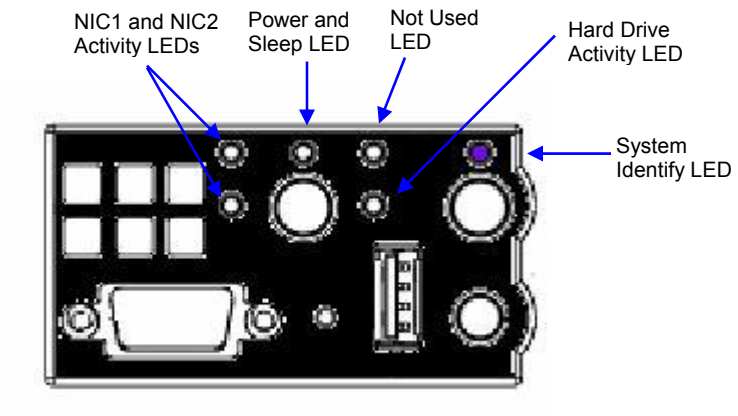

Figure 33. Control Panel LEDs

The following table identifies each LED and describes their functionality.

Table 17. Standard Control Panel LED Functions

LED	Color	State	Description
NIC1 / NIC2 Activity	Green	On	NIC Link
	Green	Blink	NIC Activity
Power / Sleep (on standby power)	Green	On	Legacy power on / ACPI S0 state
		Blink [1,4]	Sleep / ACPI S1 state
	Off	Off	Power Off / ACPI S4 or S5 state
Disk Activity	Green	Random blink	Provides an indicator for disk activity.
	Off	Off [3]	No hard disk activity
System Identification	Blue	Blink	Identify active via command or button.
	Off	Off	No Identification.

Notes:

1. Blink rate is ~1 Hz with at 50% duty cycle.
2. The amber status takes precedence over the green status. When the amber LED is on or blinking, the green LED is off.
3. Also off when the system is powered off (S4/S5) or in a sleep state (S1).
4. The power LED sleep indication is maintained on standby by the chipset. If the system is powered down without going through BIOS, the LED state in effect at the time of power off will be restored when the system is powered on until the BIOS clears it. If the system is not powered down normally, it is possible that the Power LED will be blinking at the same time that the system status LED is off due to a failure or configuration change that prevents the BIOS from running.

The current limiting resistors for the power LED and the NIC LEDs are located on the Intel® Server Board SE7230NH1-E.

4.2.1 Power / Sleep LED

Table 18. SSI Power LED Operation

State	Power Mode	LED	Description
Power Off	Non-ACPI	Off	System power is off, and the BIOS has not initialized the chipset.
Power On	Non-ACPI	On	System power is on, but the BIOS has not yet initialized the chipset.
S5	ACPI	Off	Mechanical is off, and the operating system has not saved any context to the hard disk.
S4	ACPI	Off	Mechanical is off. The operating system has saved context to the hard disk.
S3-S1	ACPI	Slow blink 1	DC power is still on. The operating system has saved context and gone into a level of low-power state.
S0	ACPI	Steady on	System and the operating system are up and running.

Notes:

1. Blink rate is ~ 1Hz with at 50% duty cycle.

4.2.2 Drive Activity LED

The drive activity LED on the front panel indicates drive activity from the onboard hard disk controllers. The server board also provides a header giving access to this LED for add-in controllers.

4.2.3 System Identification LED

The blue system identification LED is used to help identify a system for servicing. This is especially useful when the system is installed in a high density rack or cabinet that is populated with several similar systems. The system ID LED will blink when the System ID button on the control panel is pressed, or it can be illuminated remotely through server management software.

4.3 Control Panel Connectors

The control panel has one external I/O connector:

- One USB port

The following tables provide the pin-outs for the connector.

Table 19. External USB Connector (J2)

Pin #	Description
1	PWR_FP_USB2
2	USB_DN2_FP_R
3	USB_DP2_FP_R
4	GND
5	GND
6	GND
7	GND

4.4 Internal Control Panel Assembly Headers

The control panel interface board has two internal headers.

- A 50-pin header provides control and status information to and from the server board. Using a 50-pin flat cable, the header is connected to a matching SSI connector on the server board.

- A 10-pin header is used to provide USB support to the control panel. The round 10-pin cable is routed from the control panel assembly to a matching connector on the server board.

The following tables provide the pin-outs for both types of connectors.

Table 20. 50-pin Control Panel Connector (J3)

Description	Pin #	Pin #	Description
PWR_LCD_5VSB	2	1	PWR_LCD_5VSB
HDD_LED_ACT_R_L	4	3	Unused
RST_P6_PWRGOOD	6	5	FP_SYS_FLT_LED1_R_L
P5V_STBY	8	7	FP_SYS_FLT_LED2_R_L
FP_PWR_LED_R_L	10	9	P5V_STBY
IPMB_5VSB_SDA	12	11	P3V3
IPMB_5VSB_SCL	14	13	GND
FP_PWR_BTN_L	16	15	FP_ID_LED_R_L
HDD_FAULT_LED_R_L	18	17	NIC2_LINK_LED_R_L
FP_RST_BTN_L	20	19	NIC2_ACT_LED_L
GND	22	21	BP_I2C_5V_SDA
FP_ID_SW_L	24	23	BP_I2C_5V_SCL
NIC1_ACT_LED_L	26	25	FP_CHASSIS_L
FP_NMI_BTN_L	28	27	NIC1_LINK_LED_R_L
EMP_DSR2_L	30	29	GND
EMP_SIN2	32	31	EMP_INUSE_L
EMP_RTS2_L	34	33	EMP_SOUT2
EMP_DTR2_L	36	35	EMP_CTS2_L
VGA_INUSE_L	38	37	EMP_DCD2_L
VGA_VSYNC_FP_L	40	39	1_WIRE_BUS
VGA_HSYNC_FP_L	42	41	GND
VGA_BLUE_FP	44	43	GND
VGA_GREEN_FP	46	45	GND
VGA_RED_FP	48	47	GND
	50	49	GND

Table 21. Internal USB Header (J9F2)

Pin #	Description
1	PWR_FP_USB2
2	PWR_FP_USB3
3	USB_DP2_FP
4	USB_DN2_FP
5	USB_DP3_FP
6	USB_DN3_FP
7	GND
8	GND
9	TP_USB0_P9
10	TP_USB0_P10

5. PCI Riser Cards and Assembly

The Intel® Server Board SE7230NH1-E provides one PCI riser slot (Intel® Adaptive Slot), supporting full height/full length add-in card risers. The riser slot is capable of supporting risers that follow either the PCI-X* or PCI Express* specifications. The riser assembly for the server chassis consists of a single bracket with three threaded mounting holes: two on the long arm of the bracket secure the riser card to the bracket; a third is used to secure the add-in card to the riser. Tabs on the rear of the riser bracket allow the riser card to safely mate with the chassis even when no riser card is installed.

Note: Ensure the riser bracket is seated securely in the chassis before applying power as damage to the server board may occur if the metal bracket comes in contact with components.

Figure 34. PCI Riser Bracket and Optional PCI-X* and PCI Express* Risers

5.1 Riser Card Options

There are two different riser card options offered for use in the Intel® Server Chassis SR1475.

- PCI-X* – capable of supporting a single full height/full length PCI-X* 66/100 MHz add-in card.
- PCI Express* – capable of supporting a single full height/full length x8 PCI Express* add-in card.

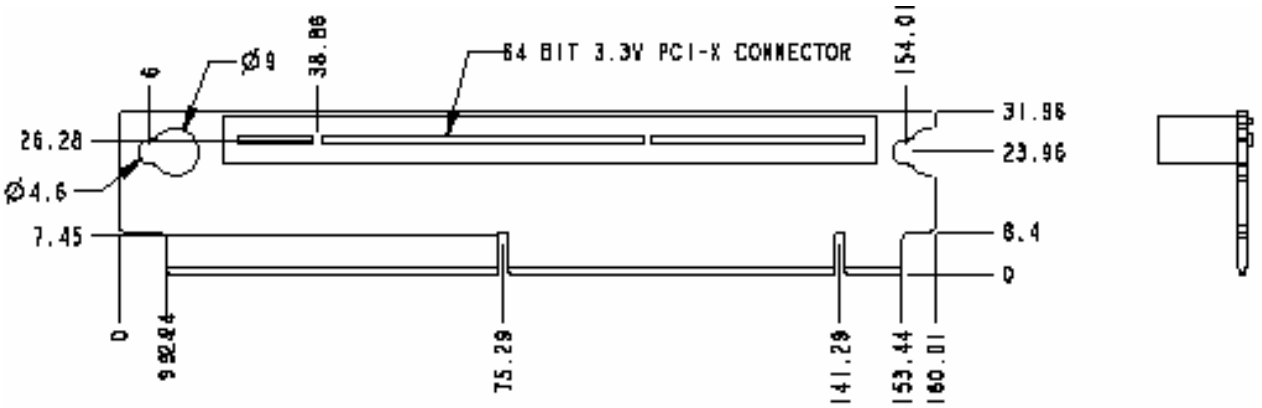

Figure 35. 1U Full Height PCI-X* Riser Card Mechanical Drawing

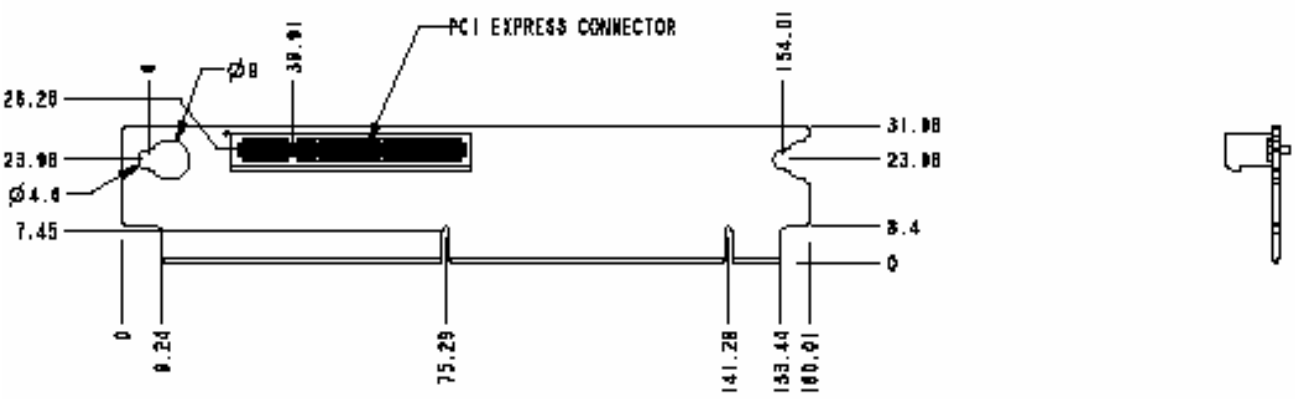

Figure 36. 1U Full Height PCI Express* Riser Card Mechanical Drawing

6. Power Sub-system

The power sub-system of the server chassis consists of a single non-redundant 350 W power supply with 7 outputs; 3.3V, 5V, 12V1, 12V2, 12V3, -12V and 5VSB. The form factor fits into a 1U system and provides a wire harness output to the system. An IEC connector is provided on the external face for AC input to the power supply. The power supply provides two non-redundant 40mm fans for self cooling. The power supply fans also provide additional airflow for parts of the system.

6.1 Mechanical Specifications

The 1U 350 W power supply is designed specifically for use in the Intel® Server Chassis SR1475. The physical size of the power supply enclosure is intended to accommodate power ranges from 350 W. The power supply size is 40mm x 106mm x 300mm and has a wire harness for the DC outputs. The AC input plugs directly into the external face of the power supply; refer to the following figure.

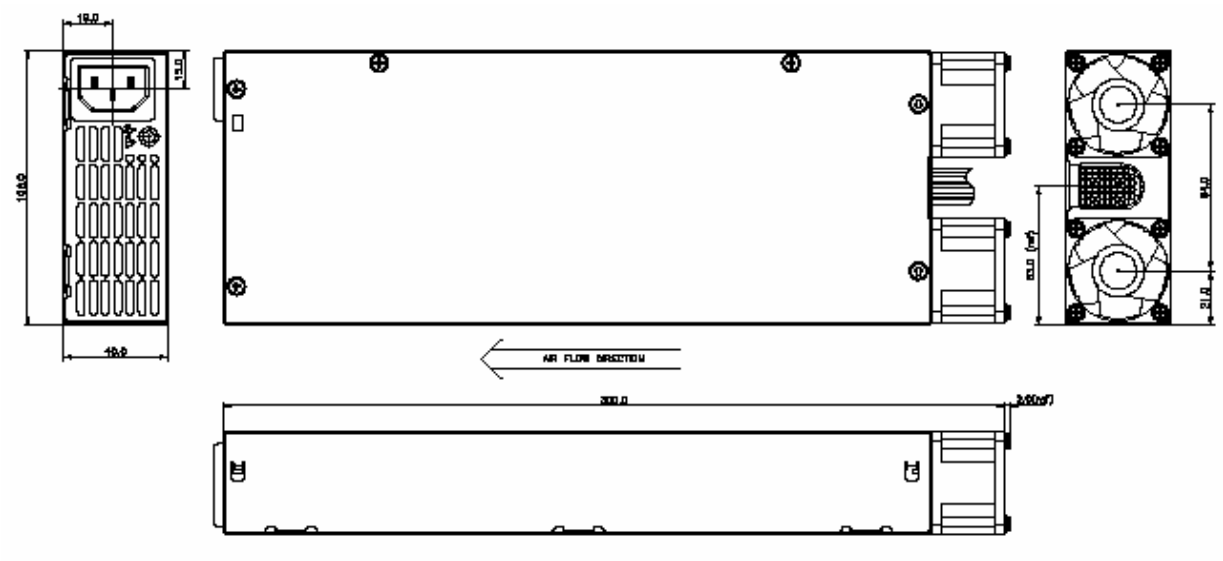

Figure 37. Power Supply Enclosure Drawing

Notes:

1. All dimensions are in mm.
2. The tolerance of the 40mm height dimension (marked with letter C) pertains to the metal case only.

6.2 Airflow Requirements

The power supply shall incorporate two 40mm fans for self-cooling and system cooling. The fans will provide no less than 8 CFM airflow through the power supply when installed in the system. The cooling air will enter the power supply module from the non-AC side.

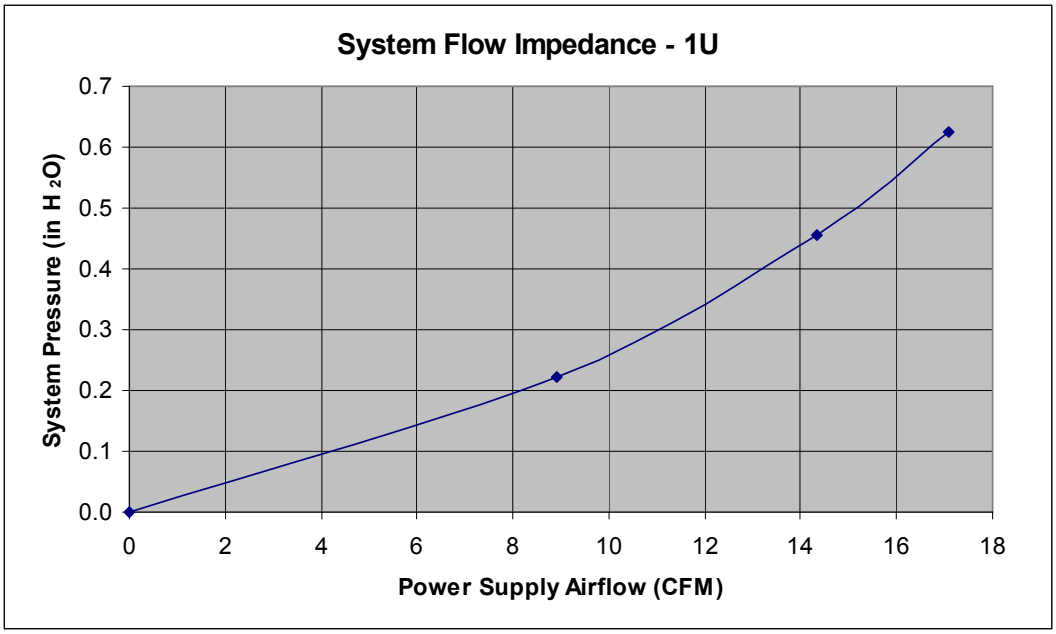

Figure 38. Airflow Characteristics

6.3 Acoustics

The power supply shall incorporate two variable speed fans. The fans speed shall vary linearly based on output loading and ambient temperature. The declared sound power levels (LwAd) of the power supply unit (PSU) must meet the requirements shown in the following table. Sound power must be measured according to ECMA 74 (www.ecma-international.org) and reported according to ISO 9296.

The acoustic measurement of the PSU shall be performed with the PSU fan operating at the RPM corresponding to the operating conditions shown in the following table. The PSU acoustic test report shall include the PSU dimension, photo, fan model and size, fan voltage (or duty cycle), RPM and PSU sound power level at each operating condition. The proper RPM thermally sustainable shall be determined through PSU thermal testing, and shall be submitted as an appendix to the acoustic test report.

The declared sound power level of the power supply module shall not exceed the levels specified in the following table.

Table 22. Acoustic Requirements

Operating Conditions	Inlet Temperature Condition	% of Maximum Loading Condition	LwAd (BA)
Maximum	45ºC	100%	6.5
Operating	28°C	60%	5.6
Idle	28°C	40%	5.4
Standby (main outputs off)	28°C	5Vsb/2A	< 5.4

6.4 Temperature

The power supply shall operate within all specified limits over the T_{op} temperature range. The average air temperature difference (ΔTps) from the inlet to the outlet of the power supply shall not exceed 20°C. All airflow shall pass through the power supply and not over the exterior surfaces of the power supply.

Table 23. Environmental Requirements

ITEM	DESCRIPTION	MIN	MAX	UNITS
T_{op}	Operating temperature range.	0	45	°C
T_{non-op}	Non-operating temperature range.	-40	70	°C
Altitude	Maximum operating altitude.		1500	m

The power supply must meet UL enclosure requirements for temperature rise limits. All sides of the power supply with exception to the air exhaust side must be classified as “handle, knobs, grips, etc. held for short periods of time only”.

6.5 Output Connectors

Listed or recognized component appliance wiring material (AVLV2), CN, **rated min 80°C**, 300VDC shall be used for all output wiring.

Table 24. Cable Lengths

From	Length (mm)	To connector #	No of pins	Description
Power Supply cover exit hole	400	P1	20	Baseboard Power Connector
Power Supply cover exit hole	665	P2	8	Processor Power Connector
Power Supply cover exit hole	160	P3	6	HD Power Connector
Power Supply cover exit hole	140	P4	4	Slim-line Power Connector

6.5.1 P1 Main power connector

Connector housing: 20-Pin Molex* Mini-Fit Jr. 39-01-2200 or equivalent.

Contact: Molex Mini-Fit, HCS, female, crimp 44476 or Molex 5556 as the alternative, or equivalent approved by Intel.

Table 25. P1 Main Power Connector

Pin	Signal	18 AWG Color	Pin	Signal	18 AWG Color
1	+3.3VDC	Orange	11	+3.3VDC	Orange
	3.3V RS	Orange/White (24AWG)	12	-12VDC	Blue
2	+3.3VDC	Orange	13	COM	Black
3	COM	Black	14	PSON#	Green (24AWG)
4	+5VDC	Red	15	COM	Black
5	COM	Black		COMRS	Black (24AWG)
6	+5VDC	Red	16	COM	Black
7	COM	Black	17	COM	Black
8	PWR OK	Gray (24AWG)	18	Reserved	N.C.
9	5 VSB	Purple	19	+5VDC	Red
10	+12V	Yellow	20	+5VDC	Red
	12VRS	Yellow/White (24AWG)		5VRS	Red/White (24AWG)

Notes:

1. Remote Sense wire double crimped.
2. P1 add cable bend requirement at P1.

6.5.2 P2 Processor Power Connector

Connector housing: 8-Pin Molex* 39-01-2085 or equivalent.

Contact: Molex 44476-1111 or Molex 5556 as the alternative, or equivalent approved by Intel.

Table 26. P2 Processor Power Connector

Pin	Signal	18 AWG color	Pin	Signal	18 AWG Color
1	COM	Black	5	+12V	Yellow
2	COM	Black	6	+12V	Yellow
3	N.C.		7	N.C.	
4	N.C.		8	N.C.	

6.5.3 HD Power Connector (P3)

Connector housing: 6-pin Molex* 39-01-2065 or equivalent.

Contacts: Molex Mini-Fit, (HCS or standard), female, crimp or equivalent.

Table 27. HD Power Connector

Pin	Signal	18 AWG Color
1	COM	Black
2	COM	Black
3	+5VDC	Red
4	+12VDC	Yellow
5	+12VDC	Yellow
6	+5Vsb	Purple

6.5.4 Slim-line Power Connector (P4)

Connector housing: 4-pin Molex* 39-01-3042 or equivalent.
Contact: Molex 44476-1111 or Molex 5556 as the alternative, or equivalent approved by Intel.

Table 28. Slim-line Power Connector

PIN	SIGNAL	18 AWG COLOR	PIN	SIGNAL	18 AWG COLOR
1	+12V	Yellow	3	+5V	Red
2	COM	Black	4	COM	Black

6.6 AC Inlet Connector

The AC input connector shall be an *IEC 320 C-14* power inlet. This inlet is rated for 10A / 250VAC.

6.7 Marking and Identification

The power supply module marking supports the following requirements: safety agency requirements, government requirements (if required, e.g. point of manufacturing), power supply vendor requirements, and Intel manufacturing and field support requirements.

6.8 AC Input Voltage

The power supply must operate within all specified limits over the following input voltage range, shown in table below. Harmonic distortion of up to 10% of the **rated line voltage** must not cause the power supply to go out of specified limits. The power supply shall power off if the AC input is less than 75VAC +/-5VAC range. The power supply shall start up if the AC input is greater than 85VAC +/-4VAC. Application of an input voltage below 85VAC shall not cause damage to the power supply, including a fuse blow.

Table 29. AC Input Rating

PARAMETER	MIN	RATED	V_{MAX}	I_{MAX}	Start up VAC	Power Off VAC
Voltage (110)	90 V_{rms}	100-127 V_{rms}	140 V_{rms}	**6 A**[1, 3]	85VAC +/-4VAC	75VAC +/-5VAC
Voltage (220)	180 V_{rms}	200-240 V_{rms}	264 V_{rms}	**3 A**[2, 3]		
Frequency	47 Hz	50/60	63 Hz			

Notes:

1. Maximum input current at low input voltage range shall be measured at 90VAC, at max load.
2. Maximum input current at high input voltage range shall be measured at 180VAC, at max load.
3. This requirement is not to be used for determining agency input current markings.

6.9 AC Line Transient Specification

AC line transient conditions shall be defined as “sag” and “surge” conditions. “Sag” conditions are also commonly referred to as “brownout”; these conditions will be defined as the AC line voltage dropping below nominal voltage conditions. “Surge” will be defined to refer to conditions when the AC line voltage rises above nominal voltage.

The power supply shall meet the requirements under the following AC line sag and surge conditions.

Table 30. AC Line Sag Transient Performance

AC Line Sag				
Duration	**Sag**	**Operating AC Voltage**	**Line Frequency**	**Performance Criteria**
Continuous	10%	Nominal AC Voltage ranges	50/60Hz	No loss of function or performance
0 to 1 AC cycle	95%	Nominal AC Voltage ranges	50/60Hz	No loss of function or performance
> 1 AC cycle	>30%	Nominal AC Voltage ranges	50/60Hz	Loss of function acceptable, self recoverable

Table 31. AC Line Surge Transient Performance

AC Line Surge				
Duration	**Surge**	**Operating AC Voltage**	**Line Frequency**	**Performance Criteria**
Continuous	10%	Nominal AC Voltages	50/60Hz	No loss of function or performance
0 to ½ AC cycle	30%	Mid-point of nominal AC Voltages	50/60Hz	No loss of function or performance

6.10 Susceptibility

The power supply meets the following electrical immunity requirements when connected to a cage with an external EMI filter which meets the criteria defined in the SSI document EPS Power Supply Specification. For further information on Intel standards please request a copy of the Intel Environmental Standards Handbook.

Table 32. Performance Criteria

Level	Description
A	The apparatus continues to operate as intended. No degradation of performance.
B	The apparatus continues to operate as intended. No degradation of performance beyond spec limits.
C	Temporary loss of function is allowed provided the function is self-recoverable or can be restored by the operation of the controls.

6.10.1 Electrostatic Discharge Susceptibility

The power supply complies with the limits defined in EN 55024: 1998 using the IEC 61000-4-2:1995 test standard and performance criteria B defined in Annex B of CISPR 24.

6.10.2 Fast Transient/Burst

The power supply complies with the limits defined in EN55024: 1998 using the IEC 61000-4-4:1995 test standard and performance criteria B defined in Annex B of CISPR 24.

6.10.3 Radiated Immunity

The power supply complies with the limits defined in EN55024: 1998 using the IEC 61000-4-3:1995 test standard and performance criteria A defined in Annex B of CISPR 24.

6.10.4 Surge Immunity

The power supply was tested with the system for immunity to AC ringwave and AC unidirectional wave, both up to 2kV, per EN 55024:1998, EN 61000-4-5:1995 and ANSI C62.45: 1992. The pass criteria includes: no unsafe operation exists under any condition; all power supply output voltage levels remain within proper spec levels; no change in operating state or loss of data was detected during and after the test profile; no component damage occurred under any condition.

The power supply complies with the limits defined in EN55024: 1998 using the IEC 61000-4-5:1995 test standard and performance criteria B defined in Annex B of CISPR 24.

6.11 AC Line Fast Transient (EFT) Specification

The power supply meets the *EN61000-4-5* directive and any additional requirements in *IEC1000-4-5:1995* and the level 3 requirements for surge-withstand capability, with the following conditions and exceptions:

- These input transients do not cause any out-of-regulation conditions, such as overshoot and undershoot, nor any nuisance trips of any of the power supply protection circuits.
- The surge-withstand does not produce damage to the power supply.

The supply meets surge-withstand test conditions under maximum and minimum DC-output load conditions.

6.12 AC Line Dropout / Holdup

An AC line dropout is defined to be when the AC input drops to 0VAC at any phase of the AC line for any length of time. During an AC dropout the power supply must meet dynamic voltage regulation requirements. An AC line dropout of any duration shall not cause tripping of control signals or protection circuits. If the AC dropout lasts longer than the hold up time, the power supply should recover and meet all turn on requirements. The power supply shall meet the AC dropout requirement over rated AC voltages (100-240VAC) and frequencies. A dropout of the AC line for any duration shall not cause damage to the power supply.

Table 33. Dropout Criteria

Loading	Dropout time
350W (100%)	15msec
260W (75%)	20msec

6.12.1 AC Line 5VSB Holdup

The 5VSB output voltage should stay in regulation under its full load (static or dynamic) during an AC dropout of 70ms / min (=5VSB holdup time) whether the power supply is in the ON or OFF state (PSON asserted or de-asserted).

6.13 Power Recovery

The power supply shall recover automatically after an AC power failure. AC power failure is defined to be any loss of AC power that exceeds the dropout criteria.

6.13.1 Voltage Brown Out

The power supply shall comply with the limits defined in EN55024: 1998 using the IEC 61000-4-11:1995 test standard and performance criteria C defined in Annex B of CISPR 24.

In addition the power supply shall meet the following Intel requirements:

A continuous input voltage below the nominal input range shall not damage the power supply or cause overstress to any power supply component. The power supply must be able to return to normal power up state after a brownout condition. Maximum input current under a continuous brownout shall not blow the fuse. The power supply shall be tested with a 3 min ramp from 90VAC voltage to 0VAC after the components have reached a steady state condition.

6.13.2 Voltage Interruptions

The power supply shall comply with the limits defined in EN55024: 1998 using the IEC 61000-4-11:1995 and the level 3 requirements test standard and performance criteria C defined in Annex B of CISPR 24.

6.14 AC Line Inrush

AC line inrush current shall not exceed 55 A peak, cold start at 20°C and no component damaged at hot start for up to one-quarter of the AC cycle, after which, the input current should be no more than the specified maximum input current. AC line inrush current may exceed 55 A peak during hot start at 45°C. The peak inrush current shall be less than the ratings of its critical components (including input fuse, bulk rectifiers, and surge limiting device).

The power supply must meet the inrush requirements for any rated AC voltage, during turn on at any phase of AC voltage, during a single cycle AC dropout condition as well as upon recovery after AC dropout of any duration, and over the specified temperature range (T_{op}).

6.15 AC Line Isolation Requirements

The power supply shall meet all safety agency requirements for dielectric strength. Additionally, the power supply vendor must provide Intel with written confirmation of the dielectric withstand test which includes: voltage level, duration of test and identification detailing how each power supply is marked to indicate the dielectric withstand test had been completed successfully. Transformers' isolation between primary and secondary windings must comply with the 3000Vac (4242Vdc) dielectric strength criteria. If the working voltage between primary and secondary dictates a higher dielectric strength test voltage, the highest test voltage should be used. In addition the insulation system must comply with reinforced insulation per safety standard IEC 950. Separation between the primary and secondary circuits, and primary to ground circuits, must comply with the IEC 950 spacing requirements.

6.16 AC Line Leakage Current

The maximum leakage current to ground for each power supply shall be 3.5 mA when tested at 240VAC.

6.17 AC Line Fuse

The power supply shall have one line fused in the single line fuse on the line (Hot) wire of the AC input. The line fusing shall be acceptable for all safety agency requirements. The input fuse shall be a slow blow type. AC inrush current shall not cause the AC line fuse to blow under any conditions. All protection circuits in the power supply shall not cause the AC fuse to blow unless a component in the power supply has failed. This includes DC output load short conditions.

6.18 Power Factor Correction

The power supply shall incorporate a Power Factor Correction circuit.

The power supply shall be tested as described in EN 61000-3-2: Electromagnetic Compatibility (EMC) Part 3: Limits- Section 2: Limits for harmonic current emissions, and shall meet the harmonic current emissions limits specified for ITE equipment.

The power supply shall be tested as described in JEIDA MITI Guideline for Suppression of High Harmonics in Appliances and General-Use Equipment and shall meet the harmonic current emissions limits specified for ITE equipment.

6.19 Efficiency

The power supply shall have a recommended efficiency of 70% at maximum load and over the specified AC voltage.

6.20 Grounding

The output ground of the pins of the power supply provides the output power return path. The output connector ground pins shall be connected to the safety ground (power supply enclosure). This grounding should be well designed to ensure passing the max allowed common mode noise levels.

The power supply shall be provided with a reliable protective earth ground. All secondary circuits shall be connected to protective earth ground. Resistance of the ground returns to chassis shall not exceed 1.0 mΩ. This path may be used to carry DC current.

6.21 Remote Sense

The power supply has remote sense return (ReturnS) to regulate out ground drops for all output voltages: +3.3V, +5V, +12V, -12V, and 5VSB. The power supply uses remote sense to regulate out drops in the system for the +3.3V, +5V, and 12V outputs. The power supply must operate within specification over the full range of voltage drops from the power supply's output connector to the remote sense points.

6.22 Output Power / Currents

The following tables define two power and current ratings for this 350 W power supply. The combined output power of all outputs shall not exceed the rated output power. The power supply must meet both static and dynamic voltage regulation requirements for the minimum loading conditions.

Table 34. Load Ratings

Voltage	Minimum Continuous Load	Maximum Continuous Load[1, 3]	Peak Load[2, 3]
+3.3V[4]	1.5 A	14 A	
+5V[4]	1.0 A	18 A	
+12V	1.5 A	24 A	28 A
-12V	0 A	0.3 A	
+5VSB	0.1 A	2.0 A	2.5 A

Notes:

1. Maximum continuous total DC output power should not exceed **350W**.
2. Peak total DC output power should not exceed **400W**.
3. Peak power and peak current loading shall be supported for a minimum of **12 seconds**.
4. Combined 3.3V/5V power shall not exceed **100W**.

6.22.1 Standby Outputs

The 5VSB output shall be present when an AC input greater than the power supply turn on voltage is applied.

6.22.2 Fan Operation in Stand-By Mode

The power supply fans shall continue to operate at their lowest speed when in stand-by mode.

6.23 Voltage Regulation

The power supply output voltages must stay within the following voltage limits when operating at steady state and dynamic loading conditions. These limits include the peak-peak ripple/noise. All outputs are measured with reference to the return remote sense signal (ReturnS).

Table 35. Voltage Regulation Limits

PARAMETER	TOLERANCE	MIN	NOM	MAX	UNITS
+3.3V	- 5% / +5%	+3.14	+3.30	+3.46	V_{rms}
+5V	- 5% / +5%	+4.75	+5.00	+5.25	V_{rms}
+12V1	- 5% / +5%	+11.40	+12.00	+12.60	V_{rms}
- 12V	- 10% / +10%	- 13.20	-12.00	-10.80	V_{rms}
+5VSB	- 5% / +5%	+4.75	+5.00	+5.25	V_{rms}

6.23.1 Dynamic Loading

The output voltages shall remain within specified limits for the step loading and capacitive loading specified below. The load transient repetition rate shall be tested between 50 Hz and 5 kHz at duty cycles ranging from 10%-90%. The load transient repetition rate is only a test specification. The Δ step load may occur anywhere within the MIN load to the MAX load.

Table 36. Transient Load Requirements

Output	Δ Step Load Size (See note)	Load Slew Rate	Test capacitive Load
+3.3V	5.0A	0.25 A/μsec	250 μF
+5V	6.0A	0.25 A/μsec	400 μF
+12V	11.0A	0.25 A/μsec	500 μF
+5VSB	0.5A	0.25 A/μsec	20 μF

Notes:

1. Step loads on each 12V output may happen simultaneously and it shall be tested that way.

6.24 Capacitive Loading

The power supply shall be stable and meet all requirements with the following capacitive loading ranges.

Table 37. Capacitve Loading Conditions

Output	MIN	MAX	Units
+3.3V	250	2200	μF
+5V	400	2200	μF
+12V	500	2200	μF
-12V	1	350	μF
+5VSB	20	350	μF

6.25 Closed loop stability

The power supply shall be unconditionally stable under all line/load/transient load conditions including capacitive load ranges. A minimum of: 45 degrees phase margin and -10dB-gain margin is required. The power supply manufacturer shall provide proof of the unit's closed-loop stability with local sensing through the submission of Bode plots. Closed-loop stability must be ensured at the maximum and minimum loads as applicable.

6.26 Common Mode Noise

The common mode noise on any output shall not exceed 350 mV pk-pk over the frequency band of 10 Hz to 20 MHz.

1. The measurement shall be made across a 100 Ω resistor between each of the DC outputs, including ground at the DC power connector and chassis ground (power subsystem enclosure).
2. The test set-up shall use a FET probe such as Tektronix* model P6046 or equivalent.

6.27 Ripple / Noise

The maximum allowed ripple/noise output of the power supply is defined in the table below. This is measured over a bandwidth of 10 Hz to 20 MHz at the power supply output connectors. A 10 μF tantalum capacitor in parallel with a 0.1 μF ceramic capacitor is placed at the point of measurement.

Table 38. Ripple and Noise

+3.3V	+5V	+12V	-12V	+5VSB
50mVp-p	50mVp-p	120mVp-p	120mVp-p	50mVp-p

6.28 Soft Starting

The power supply shall contain a control circuit which provides a monotonic soft start for its outputs without overstress of the AC line or any power supply components at any specified AC line or load conditions.

6.29 Zero Load Stability Requirements

When the power sub-system operates in a no load condition, it does not need to meet the output regulation specification, but it must operate without any tripping of over-voltage or other fault circuitry. When the power sub-system is subsequently loaded, it must begin to regulate and source current without fault.

6.30 Timing Requirements

These are the timing requirements for the power supply operation. The output voltages must rise from 10% to within regulation limits (Tvout_rise) within 5 to 70 ms, except for 5VSB; it is allowed to rise from 1.0 to 25 ms. The +3.3V, +5V and +12V output voltages should start to rise approximately at the same time. All outputs must rise monotonically. The 5V output needs to be greater than the 3.3 V output during any point of the voltage rise condition. The +5V output must never be greater than the +3.3V output by more than 2.25V. Each output voltage shall reach regulation within 50 ms (Tvout_on) of each other during turn on of the power supply. Each output voltage shall fall out of regulation within 400 ms (Tvout_off) of each other during

turn off. The table below shows the timing requirements for the power supply being turned on and off via the AC input, with PSON held low and with the AC input applied.

Table 39. Output Voltage Timing

Item	Description	MIN	MAX	UNITS
T_{vout_rise}	Output voltage rise time from each main output.	5.0 *	70 *	msec
T_{vout_on}	All main outputs must be within regulation of each other within this time.		50	msec
T_{vout_off}	All main outputs must leave regulation within this time.		400	msec

Note: The 5VSB output voltage rise time shall be from 1.0ms to 25.0ms

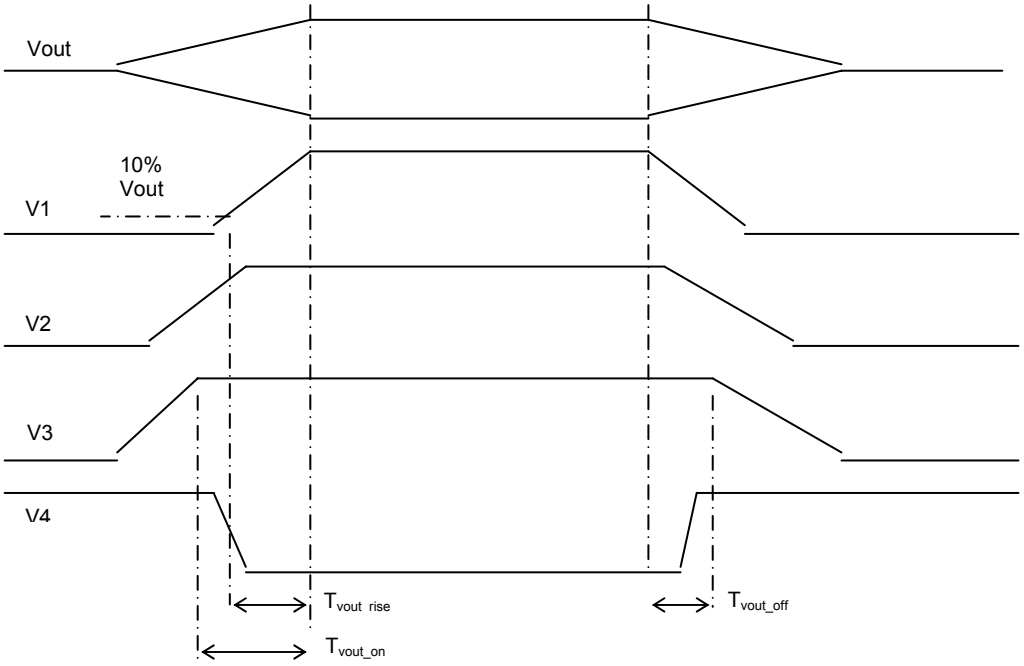

Figure 39. Output Voltage Timing

Table 40. Turn On/Off Timing

Item	Description	MIN	MAX	UNITS
$T_{sb_on_delay}$	Delay from AC being applied to 5VSB being within regulation.		1500	ms
$T_{ac_on_delay}$	Delay from AC being applied to all output voltages being within regulation.		2500	ms
T_{vout_holdup}	Time all output voltages stay within regulation after loss of AC.	21		ms
T_{pwok_holdup}	Delay from loss of AC to de-assertion of PWOK	20		ms
$T_{pson_on_delay}$	Delay from PSON# active to output voltages within regulation limits.	5	400	ms
T_{pson_pwok}	Delay from PSON# deactivate to PWOK being de-asserted.		50	ms
T_{pwok_on}	Delay from output voltages within regulation limits to PWOK asserted at turn on.	100	1000	ms
T_{pwok_off}	Delay from PWOK de-asserted to output voltages (3.3V, 5V, 12V, -12V) dropping out of regulation limits.	1		ms
T_{pwok_low}	Duration of PWOK being in the de-asserted state during an off/on cycle using AC or the PSON signal.	100		ms
T_{sb_vout}	Delay from 5VSB being in regulation to O/Ps being in regulation at AC turn on.	50	1000	ms
T_{5VSB_holdup}	Time the 5VSB output voltage stays within regulation after loss of AC.	70		msec

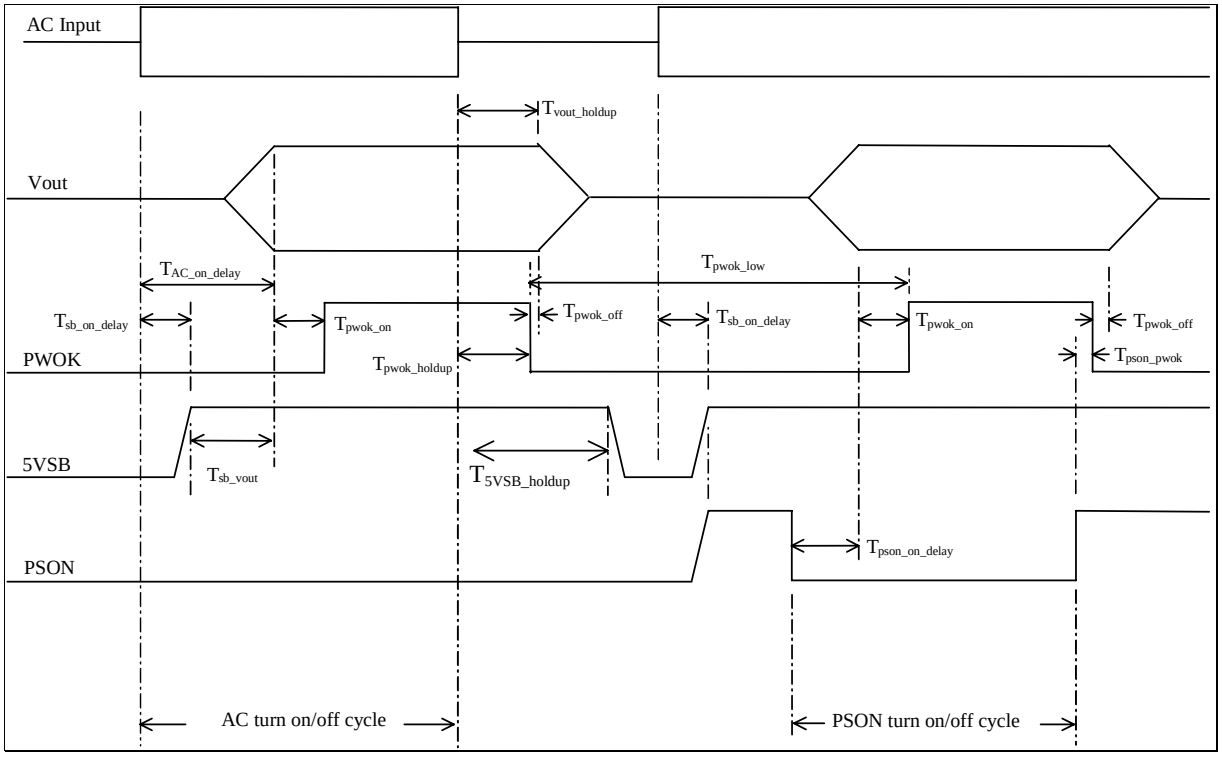

Figure 40. Turn On/Off Timing (Power Supply Signals)

6.31 Residual Voltage Immunity in Standby mode

The power supply should be immune to any residual voltage placed on its outputs (typically a leakage voltage through the system from standby output) up to 500 mV. There shall be no additional heat generated, nor stress of any internal components with this voltage applied to any individual output, and all outputs simultaneously. It also should not trip the protection circuits during turn on.

The residual voltage at the power supply outputs for no load condition shall not exceed 100 mV when AC voltage is applied.

6.32 Protection Circuits

Protection circuits inside the power supply shall cause only the power supply's main outputs to shutdown. If the power supply latches off due to a protection circuit tripping, an AC cycle OFF for 15 sec and a PSON# cycle HIGH for 1 sec shall be able to reset the power supply.

6.33 Over-Current Limit (OCP)

The power supply shall have current limits to prevent the +3.3V, +5V, and +12V outputs from exceeding the values shown in the table below. If the current limits are exceeded, the power supply shall shutdown and latch off. The latch will be cleared by toggling the PSON# signal or by an AC power interruption. The power supply shall not be damaged from repeated power cycling in this condition. -12V and 5VSB shall be protected under over-current or shorted conditions so that no damage can occur to the power supply. 5Vsb will be auto-recovered after removing the OCP limit.

Table 41. Over Current Protection (OCP)

VOLTAGE	OVER CURRENT LIMIT	
	MIN	MAX
+3.3V	15A	21A
+5V	20A	27A
+12V	30A	40A
-12V	0.625A	2A
5VSB	N/A	4A

6.34 Over-Voltage Protection (OVP)

The power supply over-voltage protection shall be locally sensed. The power supply shall shutdown and latch off after an over-voltage condition occurs. This latch shall be cleared by toggling the PSON# signal or by an AC power interruption. The table below contains the over-voltage limits. The values are measured at the output of the power supply's pins. The voltage shall never exceed the maximum levels when measured at the power pins of the power supply connector during any single point of fail. The voltage shall never trip any lower than the minimum levels when measured at the power pins of the power supply connector. 5Vsb will be auto-recovered after removing the OVP limit.

Exception: +5VSB rail should be able recover after its over-voltage condition occurs.

Table 42. Over-Voltage Protection (OVP) Limits

Output Voltage	MIN (V)	MAX (V)
+3.3V	3.9	4.5
+5V	5.7	6.5
+12V	13.3	14.5
-12V	-13.3	-16
+5VSB	5.7	6.5

6.35 Over-Temperature Protection (OTP)

The power supply will be protected against over-temperature conditions caused by loss of fan cooling or excessive ambient temperature. In an OTP condition the power supply will shutdown. When the power supply temperature drops to within specified limits, the power supply shall restore power automatically, while the 5VSB remains always on. The OTP circuit must have built in hysteresis such that the power supply will not oscillate on and off due to temperature recovering condition. The OTP trip level shall have a minimum of 4°C of ambient temperature hysteresis.

6.36 Control and Indicator Functions

The following sections define the input and output signals from the power supply. Signals that can be defined as low true use the following convention: Signal# = low true.

6.37 PSON# Input Signal

The PSON# signal is required to remotely turn on/off the power supply. PSON# is an active low signal that turns on the +3.3V, +5V, +12V, and -12V power rails. When this signal is not pulled low by the system, or left open, the outputs (except the +5VSB) turn off. This signal is pulled to a standby voltage by a pull-up resistor internal to the power supply.

Table 43. PSON# Signal Characteristic

Signal Type	Accepts an open collector/drain input from the system. Pull-up to VSB located in power supply.	
PSON# = Low	ON	
PSON# = High or Open	OFF	
	MIN	MAX
Logic level low (power supply ON)	0V	1.0V
Logic level high (power supply OFF)	2.0V	5.25V
Source current, Vpson = low		4mA
Power up delay: $T_{pson_on_delay}$	5msec	400msec
PWOK delay: T_{pson_pwok}		50msec

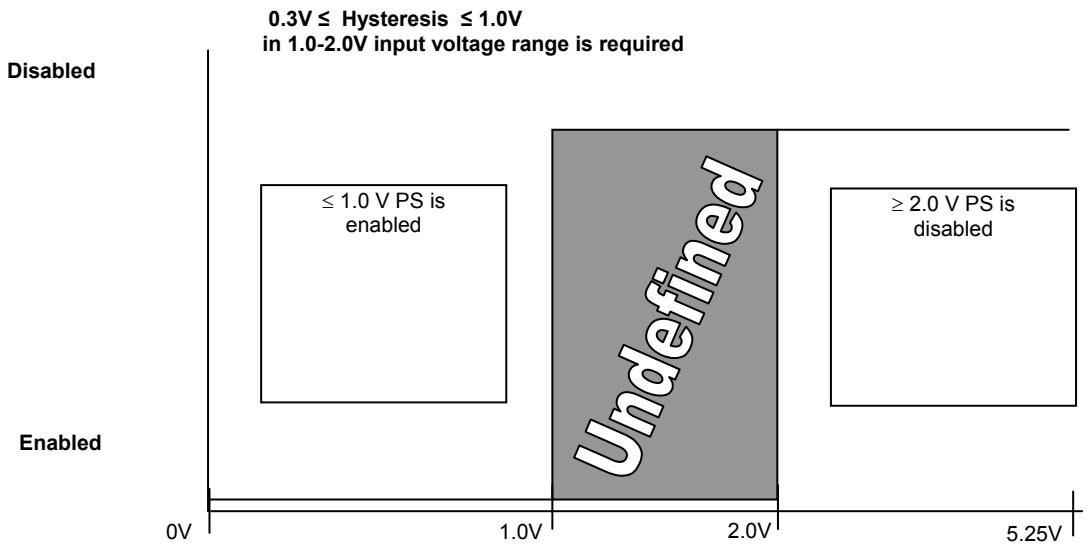

Figure 41. PSON# Required Signal Characteristic.

6.38 PWOK (Power OK) Output Signal

PWOK is a power OK signal and will be pulled HIGH by the power supply to indicate that all the outputs are within the regulation limits of the power supply. When any output voltage falls below regulation limits or when AC power has been removed for a time sufficiently long so that power supply operation is no longer guaranteed, PWOK will be de-asserted to a LOW state. The start of the PWOK delay time shall inhibited as long as any power supply output is in current limit.

Table 44. PWOK Signal Characteristics

Signal Type	Open collector/drain output from power supply. Pull-up to VSB located in system.	
PWOK = High	Power OK	
PWOK = Low	Power Not OK	
	MIN	**MAX**
Logic level low voltage, Isink=4mA	0V	0.4V
Logic level high voltage, Isource=200μA	2.4V	5.25V
Sink current, PWOK = low		4mA
Source current, PWOK = high		2mA
PWOK delay: T_{pwok_on}	100ms	1000ms
PWOK rise and fall time		100μsec
Power down delay: T_{pwok_off}	1ms	200msec

6.39 Environmental Requirements

6.39.1 Temperature

Operating Ambient, normal mode (inlet air): +0°C min / +45°C max at 5000 feet above sea level.

(At full load, with a maximum rate of change of 5°C/10 minutes, but no more than 10°C/hr)

Operating Ambient, stand-by mode (inlet air): +0°C min / +45°C max at 5000 feet above sea level.

Non-operating Ambient: -40°C to +70°C (Maximum rate of change of 20°C/hour)

6.39.2 Humidity

Operating: To 85% relative humidity (non-condensing)

Non-Operating: To 95% relative humidity (non-condensing)

Note: 95% relative humidity is achieved with a dry bulb temperature of 55°C and a wet bulb temperature of 54°C.

6.39.3 Altitude

Operating: to 5000 ft

Non-operating: to 50,000 ft

6.39.4 Mechanical Shock

Non-operating: 50 G Trapezoidal Wave, Velocity change = 170 in. / sec.
Three drops in each of six directions are applied to each of the samples.

6.39.5 Random Vibration

Non-operating

- Sine sweep:
  5Hz to 500Hz @ 0.5gRMS at 0.5 octave/min; dwell 15 min at each of 3 resonant points;
- Random profile:
  5Hz @ 0.01g²/Hz to 20Hz @ 0.02g²/Hz (slope up); 20Hz to 500Hz @ 0.02g²/Hz (flat);
  Input acceleration = 3.13gRMS; 10 min. per axis for 3 axis on all samples

6.39.6 Thermal Shock (Shipping)

Non-operating: -40°C to +70°C, 50 cycles, 30°C/min. ≥ transition time ≥ 15°C/min., duration of exposure to temperature extremes for each half cycle shall be 30 minutes.

6.39.7 Ecological Requirements

Cadmium shall not be used in painting or plating.
Cadmium shall not be used in any of the cabling and wiring.
No Quaternary salt electrolytic capacitors shall be used. Example of prohibited caps: United Chemi-Con type: LXF, LXY, and LXZ.

6.39.8 Catastrophic Failure

The power supply shall be designed to fail without startling noise or excessive smoke.

7. Electromagnetic Compatibility

7.1 EMI

The power supply shall comply with FCC Part 15, CISPR 22 and EN55022; Class A for both conducted and radiated emissions with a 10dB margin. Tests shall be conducted using a shielded DC output cable to a shielded load. The load shall be adjusted as follows for three tests: no load on each output; 50% load on each output; and 75% load on each output. Tests will be performed at 100VAC 50Hz, 120 VAC 60 Hz, and 230 VAC 50 Hz power.

Margin at 100% loading shall be 3-4dB from the class A limit.

The power supply shall comply with EN55024.

The power supply when installed in the system must meet all the immunity requirements when integrated into the end Intel system.

7.2 Input Line Current Harmonic Content (PFC)

The power supply shall meet the requirements of EN61000-3-2 Class A and the Guidelines for the Suppression of Harmonics in Appliances and General Use Equipment Class A for harmonic line current content at full rated power.

Table 45. Harmonic Limits, Class A equipment

	Per: EN 61000-3-2		Per: JEIDA MITI
Harmonic Order n	Maximum permissible Harmonic current at 230Vac/50Hz in Amps		Maximum permissible Harmonic current at 100Vac/50Hz in Amps
Odd harmonics			
3	2.3		5.29
5	1.14		2.622
7	0.77		1.771
9	0.4		0.92
11	0.33		0.759
13	0.21		0.483
15≤ n ≤39	0.15x (15/n)		0.345x (15/n)
Even harmonics			
2	1.08		2.484
4	0.43		0.989
6	0.3		0.69
8≤ n ≤40	0.23x (8/n)		0.529x (8/n)

7.3 Magnetic Leakage Fields

The PFC choke magnetic leakage field shall not cause any interference with a high resolution computer monitor placed next to or on top of the end use chassis. Final acceptable leakage field strength will be determined by the end system vendor during system level testing in the end use chassis.

7.4 Voltage Fluctuations and Flicker

The power supply shall meet the specified limits of EN61000-3-3, for voltage fluctuations and flicker for equipment ≤ 16 amps connected to low voltage distribution systems.

7.5 Reliability / Warranty / Service

7.5.1 Component De-rating

The following component de-rating guidelines shall be followed:

- Semiconductor junction temperatures shall not exceed 110°C with an ambient of 45°C. Any exceptions are subject to final approval.
- Transformer temperature shall not exceed 110°C with an ambient of 45°C. Any exceptions are subject to final approval.
- Inductor case temperature shall not exceed 85% of rated temperature in °C.
- Capacitor case temperature shall not exceed 85% of rated temperature in °C.
- Resistor wattage de-rating shall be > 30%.
- Component voltage and current de-rating shall be > 15% at operating temperature. During abnormal conditions (such as a short circuit and the like) no de-rating is allowed as long as each component max rating is not exceeded. Any exceptions are subject to final approval.

7.5.2 Component Life requirement

All components' life expectancy requirement is 3 years minimum, calculated for: 75% of max continues load at 40°C ambient temperature and at 100VAC line voltage.

7.6 Mean Time Between Failures (MTBF)

The power supply shall have a minimum MTBF at continuous operation of:

- 100,000 hours at 75% load and 40°C, as calculated by Bellcore RPP, or
- 250,000 hours demonstrated at 75% load and 40°C.

7.6.1 Warranty Period

Three (3) years.

7.6.2 Serviceability

No troubleshooting by maintenance personnel is to be performed. Only unit replacement will be done in the field.

7.7 Power Supply Returned for Repair

Power supplies returned to the vendor for repair, are returned for full credit.

Power supplies returned from vendor repair will be accepted by Intel only after the vendor has performed an additional burn-in of 4 hours min. at 45°C ± 5°C at maximum load and has re-tested the power supply following the burn-in.

The vendor shall supply failure analysis, and final test results on all repaired units reshipped to Intel.

7.8 Modifications / Change Control

Following the qualification of the power supply, any changes in parts, materials, or processes used in power supply manufacturer which affect form, fit, function, safety, reliability (type one changes), or documentation of the power supplies delivered to Intel (type two changes) must be approved by Intel prior to the incorporation of the changes.

Significant changes as determined by Intel will require re-qualification of the power supply as per Qualification Inspection/Test Procedure.

Intel reserves the right to negate type one (form, fit, safety, function, or reliability) changes within 30 days. All type one changes must be submitted to Intel for review and must be approved in writing.

Modification to certification records shall be provided to Intel upon completion.

7.9 Power Supply Compliance Overview

The power supply must comply with all regulatory requirements for its' intended geographical market. Depending on the chosen market, regulatory requirements may vary. Although a power supply can be designed for worldwide compliance, there may be cost factors that drive different versions of supplies for different geographically targeted markets.

7.10 Power Supplies Compliance Information

Australia / New Zealand	AS/NZS 3562 (CB deviation)
Canada / USA	UL60 950 – CSA60 950
China (CNCA)	GB4943
Europe (CE) / Germany	EN60 950 – 73/23/EEC
International	IEC 60 950
Nordics	EMKO-TSE (74-SEC) 207/94 (CB deviation)

Notes:

1. Certifications shall be to the most recent accepted Edition of each standard.
2. The above certifications are the minimum requirements that enable end system products to obtain International certifications. To support ALPHA or BETA development shipment of engineering sample type shipments, other 3rd party certifications such as (NEMKO, CSA) are acceptable.
3. Power Supply Vendor shall provide the following power supply certification documentation to Intel. Documents should be provided electronically if possible.
4. UL Report & Approval Letter that covers UL Recognition for both USA & Canada Bauart License (Germany).
5. CB Report & CB Certificate – CB Report must include all national deviations so power supply report can be used in any CB member country. CB Report to also cover all EMKO-TSE (74-SEC) 207/94.

7.11 EMC Compliance Information

Australia / New Zealand	AS/NZS 3548 (Based on CISPR 22) – Class B
Canada	ICES-003 - Class A
China (CNCA)	GB9254
Europe (CE) - 89/336/EEC	EN55022 – Class A
International	CISPR 22 – Class A
Taiwan (BSMI DOC)	BSMI CNS13438 – Class A
USA (FCC)	Title 47 CFR, Part 15 – Class A

7.12 Immunity Compliance Information

Europe (CE) - 89/336/EEC	EN55024
China (CNCA)	N/A – Not Required
International	CISPR 24

Notes: For immunity, the power supply shall comply with the following particular standards.

1. EN 61000-4-2 – Electrostatic Discharge
2. EN 61000-4-3– Radiated RFI Immunity
3. EN 61000-4-4– Electrical Fast Transients.
4. EN 61000-4-5 – Electrical Surge
5. EN 61000-4-6 – RF Conducted
6. EN 61000-4-8 – Power Frequency Magnetic Fields
7. EN 61000-4-11 – Voltage Dips and Interruptions

7.13 Harmonics & Voltage Flicker Compliance Information

The following requirements apply for AC type power supplies.

Europe (CE) - 89/336/EEC	EN61000-3-2 & EN61000-3-3
China (CNCA)	GB17625
International	IEC61000-3-2 & IEC61000-3-3
Japan	JEIDA

7.14 Environmental / Ecology Compliance Information

For Europe, compliance to 91/338/EEC (Cadmium restrictions) is a legal requirement. All power supplies shall not have the use of cadmium.

The Blue Angel, Green PC and TCO requirements are all considered voluntary and are not required by law. However it is strongly encourage to comply with these requirements, as customers, especially governmental type, typically require compliance to these ecology schemes.

Germany	Blue Angel eco-label
Europe	91/338/EEC (Cadmium restrictions)
Japan	Green PC eco-label
Sweden	TCO eco-label

Materials used in the power supply shall comply with Intel's Environmental Product content Specification located at http://supplier.intel.com/ehs/environmental.htm.

If the power supply is an external power supply rated less than 75 W, the power supply shall comply with the European Commission's "Code of Conduct for External Power Supplies." Current requirements are found at:
http://quality.intel.com/CPR/ecology/positions/powersupply.doc.

Examples of Blue Angel, TCO, and Green PC eco-labels require that plastic parts > 25g meet the following:

- Are marked according to ISO 11469 (requires identification of plastic, e.g. >PC/ABS<)
- Does not contain halogenated flame retardant (e.g. brominated flame retardants)

7.15 Other Safety Requirement Notations

7.15.1 Certification Conditions

Safety certifications shall not be contingent to any unusual or difficult conditions of acceptability such as mandatory additional cooling or power de-rating.

7.15.2 Isolation Between Primary - Secondary

Reinforced insulation must be used between primary and secondary circuits.

7.15.3 Creepage & Clearance Requirements

Creepage and Clearance distances must comply to those specified by safety standards.

7.15.4 Leakage Current Maximums

Maximum leakage current to ground shall be less than 3.5mA.

7.15.5 Max Surface Temperatures

The temperature of the power supply chassis shall not exceed 70 °C under all circumstances. Otherwise, a UL international HOT SURFACE label is required. If this HOT SURFACE label is required, it shall be placed in such a manner that when the power supply is extracted from the system, the label shall be visible before the operator has a chance to touch the hot surface of the power supply.

7.15.6 Date Coded Serial Numbers

The power supply shall be marked with a date-coded number for traceability purposes and to comply with CSA 950 marking requirements.

7.15.7 Power Input Electrical Ratings

Power supply shall be tested to allow Nominal AC input operating voltages (100-127 VAC and 200-240 VAC) and current rating. 127V is required for countries such as Mexico.

The earth safety conductor shall be color-coded green/yellow and suitably sized for the max current of the power supply.

7.15.8 Maximum Allowable Temperatures on Inlet Receptacles

The inlet receptacle shall be suitably rated for the maximum operating temperature to the power supply, when installed in a rack environment.

7.15.9 Maximum Allowable Temperatures on Power Cords

The exhaust air of the power supply shall not impose temperatures that will exceed the maximum allowable temperature of the power cord.

8. Supported Intel® Server Boards

The Intel® Server Chassis SR1475 is mechanically and functionally designed to support the Intel® Server Board SE7230NH1-E.

8.1 Intel® Server Board SE7230NH1-E Feature Set

- Processor and Front Side Bus (FSB) support
  - Supports Intel® Pentium® processor Extreme Edition, Intel® Pentium® D processor, Intel® Pentium® 4 processor, and the Intel® Celeron® D processor in the Intel® LGA775 package
  - Supports Intel® Dual Core Architecture
  - Supports Hyper-Threading Technology
  - Supports Intel® Extended Memory System 64 Technology (Intel® EM64T)
- Intel® E7230 Chipset components
  - Intel® E7230 MCH Memory Controller Hub
  - Intel® ICH7R I/O Controller
  - Intel® 6702 PXH-V-V PCI-X* Hub
  - 12-deep In-order Queue
- Memory System
  - Four DIMM sockets supporting 400/533/667MHz DDR2 DIMMs
  - Data bandwidth per channel of 4.2GB/s or 8.4GB/s in dual channel when using DDR2 667MHz
  - Support for up to two DDR2 channels for a total of four DIMMs (2 DIMMs / Channel) providing up to 8GB max memory capacity.
  - Support for 256MB, 512MB, 1GB and 2GB DRAM modules
- Intel® Adaptive Slot supporting one x8 PCI Express* or one PCI-X* 64/100MHz full length adapter via riser card.
- Serial ATA host controller
- Four independent SATA ports support data transfer rates up to 1.5 Gb/s (150MB/s) per port
- One IDE controller supporting a maximum of two ATA-100* compatible devices
- Universal Serial Bus 2.0 (USB)
- Two external USB ports with an additional internal header providing two optional USB ports for front panel support.
- Supports wake-up from sleeping states S1-S4 (S3 not supported)
- Supports Legacy Keyboard/Mouse connections when using PS2-USB dongle
- LPC (Low Pin Count) bus segment with Super I/O controller chips providing all PC-compatible I/O (floppy, serial, keyboard, mouse, serial com port) and integrated hardware monitoring
- SSI-compliant connectors for SSI interface support
- Standard Intel 34pin SSI front panel and 2x12 and 2x4 power connectors

- Fan Support
  - Two general purpose 3-pin fans
  - Two general purpose 4-pin fans
  - One 4-pin processor fan (active heatsink required)
  - Four 8-pin dual rotor fans for Intel high density applications (Intel® Server Chassis SR1475 and Intel® Server System SR1475NH1-E).
- Diagnostic LEDs to display POST code indicators during boot

The following image shows the board layout of the Intel® Server Board SE7230NH1-E. Each connector and major component is identified by number and is identified in Table 46.

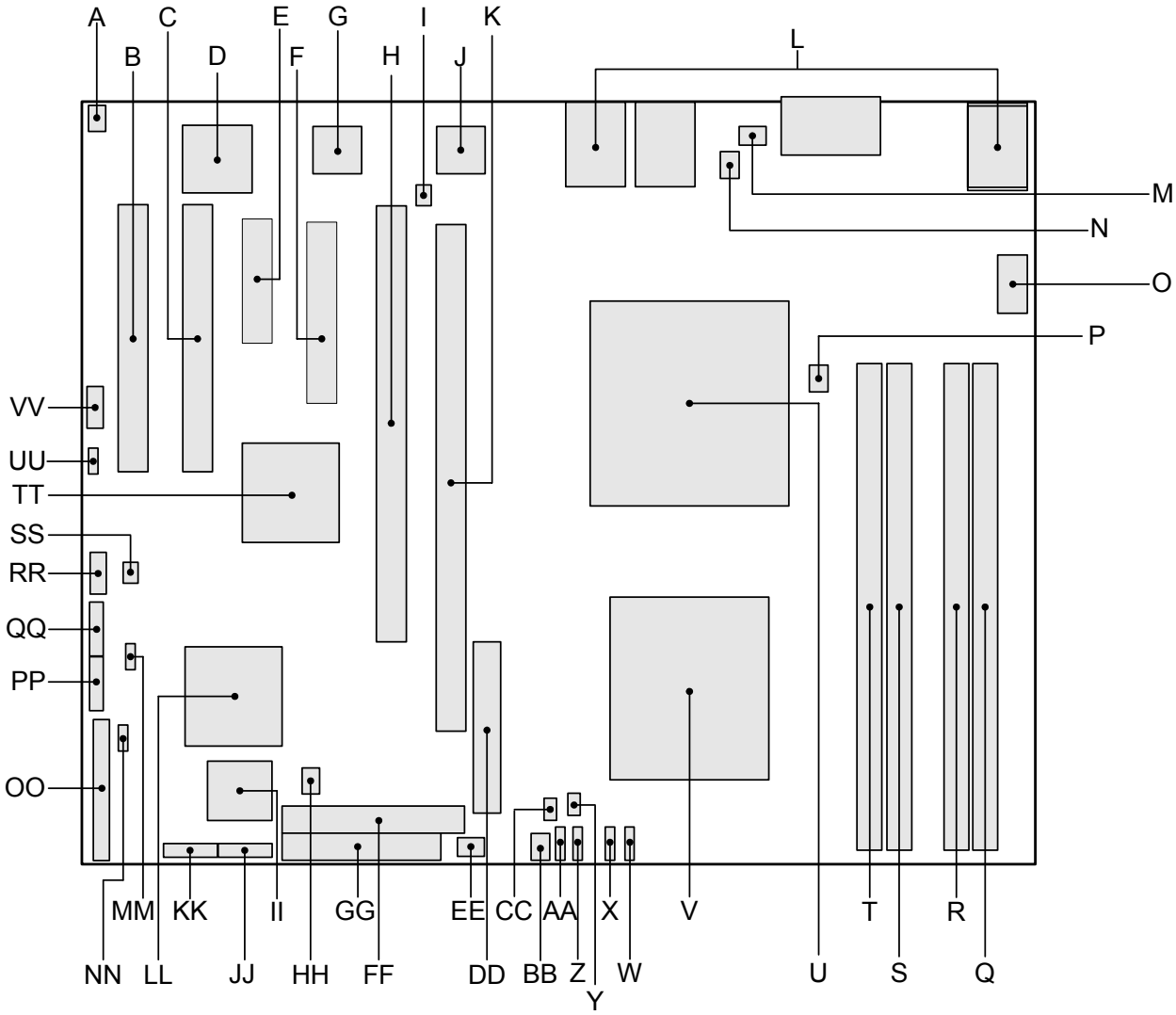

Figure 42. SE7230NH1-E (LX) Board Layout

Table 46: Baseboard Layout Reference

Ref	Description	Ref	Description	Ref	Description
A	Chassis Intrusion Header	Q	Memory Slot DIMM 2B	GG	Floppy Connector
B	PCI (32bit/33MHz) Slot 1	R	Memory Slot DIMM 1B	HH	SCSI LED Connector (moved)
C	PCI (32bit/33MHz) Slot 2	S	Memory Slot DIMM 2A	II	National* PC8374L0IBU SIO
D	ATI ES1000 Video Controller	T	Memory Slot DIMM 1A	JJ	SATA Port 3
E	PCI Express* x4 (x1 Lane) Slot 3	U	775 Land (LGA) CPU Socket	KK	SATA Port 2
F	PCI Express* x8 (x4 Lane) Slot 4	V	Intel® 7230 MCH	LL	Intel® 82802 ICH7R
G	Intel® 82541PI LAN Controller	W	SysFan8	MM	Clear CMOS Jumper
H	PCI-X* (64bit/133MHz) Slot 5	X	SysFan7	NN	Maintenance Mode Jumper
I	LAN SPI Flash	Y	Hardware Management Controller	OO	Front Panel Connector
J	Intel® 82573E/V LAN Controller	Z	SysFan6	PP	SATA Port 1
K	Intel® Adaptive Slot, Slot 6	AA	SysFan5	QQ	SATA Port 0
L	Back Panel Connectors	BB	SysFan4	RR	External USB Connector
M	SysFan1	CC	Hardware Management Controller	SS	BIOS SPI Flash
N	SysFan2	DD	2 x 12 Power Connector	TT	Intel® 6702 PXH-V-V Controller
O	2 x 4 Power Connector	EE	SysFan3	UU	I^2C Connector
P	CPU Fan	FF	PATA IDE Connector	VV	RMC Connector
				WW	NIC1 FW Enable

9. Regulatory, Environmentals, and Specifications

9.1 Product Regulatory Compliance

9.1.1 Product Safety Compliance

The Intel® Server Chassis SR1475 complies with the following safety requirements:

- UL 1950 - CSA 950 (US/Canada)
- EN 60 950 (European Union)
- IEC60 950 (International)
- CE – Low Voltage Directive (73/23/EEC) (European Union)
- EMKO-TSE (74-SEC) 207/94 (Nordics)

9.1.2 Product EMC Compliance

The Intel® Server Chassis SR1475 has been tested and verified to comply with the following electromagnetic compatibility (EMC) regulations when installed a compatible Intel host system. For information on compatible host system(s) refer to Intel's Server Builder website or contact your local Intel representative.

- FCC (Class A Verification) – Radiated & Conducted Emissions (USA)
- ICES-003 (Class A) – Radiated & Conducted Emissions (Canada)
- CISPR 22 (Class A) – Radiated & Conducted Emissions (International)
- EN55022 (Class A) – Radiated & Conducted Emissions (European Union)
- EN55024 (Immunity) (European Union)
- EN61000-3-2 & -3 (Power Harmonics & Fluctuation and Flicker)
- CE – EMC Directive (89/336/EEC) (European Union)
- VCCI (Class A) – Radiated & Conducted Emissions (Japan)
- AS/NZS 3548 (Class A) – Radiated & Conducted Emissions (Australia / New Zealand)
- RRL (Class A) Radiated & Conducted Emissions (Korea)
- BSMI (Class A) Radiated & Conducted Emissions (Taiwan)

9.1.3 Product Regulatory Compliance Markings

This product is provided with the following Product Certification Markings.

- UL / cUL Listing Mark
- CE Mark
- German GS Mark
- FCC, Class A Verification Marking
- ICES-003 (Canada EMC Compliance Marking)
- VCCI, Class A Mark
- Australian C-Tick Mark
- Russian GOST Mark
- Taiwan BSMI Certification Number and Class A Warning

9.2 Electromagnetic Compatibility Notices

9.2.1 USA

This device complies with Part 15 of the FCC Rules. Operation is subject to the following two conditions: (1) this device may not cause harmful interference, and (2) this device must accept any interference received, including interference that may cause undesired operation.

For questions related to the EMC performance of this product, contact:

Intel Corporation
5200 N.E. Elam Young Parkway
Hillsboro, OR 97124
1-800-628-8686

This equipment has been tested and found to comply with the limits for a Class A digital device, pursuant to Part 15 of the FCC Rules. These limits are designed to provide reasonable protection against harmful interference in a residential installation. This equipment generates, uses, and can radiate radio frequency energy and, if not installed and used in accordance with the instructions, may cause harmful interference to radio communications. However, there is no guarantee that interference will not occur in a particular installation. If this equipment does cause harmful interference to radio or television reception, which can be determined by turning the equipment off and on, the user is encouraged to try to correct the interference by one or more of the following measures:

- Reorient or relocate the receiving antenna.
- Increase the separation between the equipment and the receiver.
- Connect the equipment to an outlet on a circuit other than the one to which the receiver is connected.
- Consult the dealer or an experienced radio/TV technician for help.

Any changes or modifications not expressly approved by the grantee of this device could void the user's authority to operate the equipment. The customer is responsible for ensuring compliance of the modified product.

Only peripherals (computer input/output devices, terminals, printers, etc.) that comply with FCC Class B limits may be attached to this computer product. Operation with noncompliant peripherals is likely to result in interference to radio and TV reception.

All cables used to connect to peripherals must be shielded and grounded. Operation with cables, connected to peripherals that are not shielded and grounded may result in interference to radio and TV reception.

9.2.2 FCC Verification Statement

Product Type: SR1475; SE7230NH1-E
This device complies with Part 15 of the FCC Rules. Operation is subject to the following two conditions: (1) This device may not cause harmful interference, and (2) this device must accept any interference received, including interference that may cause undesired operation.

For questions related to the EMC performance of this product, contact:

Intel Corporation
5200 N.E. Elam Young Parkway
Hillsboro, OR 97124-6497
Phone: 1 (800)-INTEL4U or 1 (800) 628-8686

9.2.3 ICES-003 (Canada)

Cet appareil numérique respecte les limites bruits radioélectriques applicables aux appareils numériques de Classe A prescrites dans la norme sur le matériel brouilleur: "Appareils Numériques", NMB-003 édictée par le Ministre Canadian des Communications.

(English translation of the notice above) This digital apparatus does not exceed the Class A limits for radio noise emissions from digital apparatus set out in the interference-causing equipment standard entitled "Digital Apparatus," ICES-003 of the Canadian Department of Communications.

9.2.4 Europe (CE Declaration of Conformity)

This product has been tested in accordance too, and complies with the Low Voltage Directive (73/23/EEC) and EMC Directive (89/336/EEC). The product has been marked with the CE Mark to illustrate its compliance.

9.2.5 Japan EMC Compatibility

Electromagnetic Compatibility Notices (International)

この装置は、情報処理装置等電波障害自主規制協議会（ＶＣＣＩ）の基準に基づくクラスＡ情報技術装置です。この装置を家庭環境で使用すると電波妨害を引き起こすことがあります。この場合には使用者が適切な対策を講ずるよう要求されることがあります。

English translation of the notice above:
This is a Class A product based on the standard of the Voluntary Control Council For Interference (VCCI) from Information Technology Equipment. If this is used near a radio or television receiver in a domestic environment, it may cause radio interference. Install and use the equipment according to the instruction manual.

9.2.6 BSMI (Taiwan)

The BSMI Certification number and the following warning is located on the product safety label which is located on the bottom side (pedestal orientation) or side (rack mount configuration).

警告使用者：

這是甲類的資訊產品，在居住的環境中使用時，可能會造成射頻干擾，在這種情況下，使用者會被要求採取某些適當的對策。

9.3 Replacing the Back up Battery

The lithium battery on the server board powers the real time clock (RTC) for up to 10 years in the absence of power. When the battery starts to weaken, it loses voltage, and the server settings stored in CMOS RAM in the RTC (for example, the date and time) may be wrong. Contact your customer service representative or dealer for a list of approved devices.

WARNING

Danger of explosion if battery is incorrectly replaced. Replace only with the same or equivalent type recommended by the equipment manufacturer. Discard used batteries according to manufacturer's instructions.

ADVARSEL!

Lithiumbatteri - Eksplosionsfare ved fejlagtig håndtering. Udskiftning må kun ske med batteri af samme fabrikat og type. Levér det brugte batteri tilbage til leverandøren.

ADVARSEL

Lithiumbatteri - Eksplosjonsfare. Ved utskifting benyttes kun batteri som anbefalt av apparatfabrikanten. Brukt batteri returneres apparatleverandøren.

VARNING

Explosionsfara vid felaktigt batteribyte. Använd samma batterityp eller en ekvivalent typ som rekommenderas av apparattillverkaren. Kassera använt batteri enligt fabrikantens instruktion.

VAROITUS

Paristo voi räjähtää, jos se on virheellisesti asennettu. Vaihda paristo ainoastaan laitevalmistajan suosittelemaan tyyppiin. Hävitä käytetty paristo valmistajan ohjeiden mukaisesti.

9.4 System Level Environmental Limits

The table below defines the system level operating and non-operating environmental limits (office or computer room environment).

Table 47. System Office Environment Summary

Parameter	Limits
Operating Temperature	+10°C to +35°C with the maximum rate of change not to exceed 10°C per hour
Non-Operating Temperature	-40°C to +70°C
Non-Operating Humidity	50%- 90%, non-condensing with a maximum wet bulb of 28°C
Acoustic noise	Sound Pressure: 55 dBA (Rackmount) in an idle state at typical office ambient temperature. (23°C +/- 2°C) Sound Power: 7.0 BA in an idle state at typical office ambient temperature. (23 +/- 2 degrees C)
Shock, operating	Half sine, 2 g peak, 11 mSec
Shock, unpackaged	Trapezoidal, 25 g, velocity change 136 inches/sec (≧40 lbs to > 80 lbs)
Shock, packaged	Non-palletized free fall in height 24 inches (≧40 lbs to > 80 lbs)
Vibration, unpackaged	5 Hz to 500 Hz, 2.20 g RMS random
Shock, operating	Half sine, 2 g peak, 11 mSec
ESD	+/-15kV except I/O port +/-8KV per Intel Environmental test specification
System Cooling Requirement in BTU/Hr	1826 BTU/hour

9.5 Serviceability

The system is designed to be serviced by qualified technical personnel only. Power must be removed from the system prior to opening the chassis for service.

The desired Mean Time To Repair (MTTR) of the system is 30 minutes including diagnosis of the system problem. To meet this goal, the system enclosure and hardware have been designed to minimize the MTTR.

Following are the maximum times that a trained field service technician should take to perform the listed system maintenance procedures, after diagnosis of the system.

Table 48. Mean Time To Repair Estimate

Activity	Time Estimate
Remove cover	10 sec
Remove and replace hard disk drive	3 min[1]
Remove and replace power supply module	2 min
Remove and replace system fan	2 min
Remove and replace backplane board	5 min
Remove and replace front panel board	5 min
Remove and replace server board	10 min

[1] Includes swapping drive from drive tray

Appendix A: Intel® Server Chassis SR1475 Integration and Usage Tips

This section provides a list of useful information that is unique to the Intel® Server Chassis SR1475 and should be kept in mind while integrating and configuring the Intel® Server Board SE7230NH1-E.

- The server chassis does not contain internal hot-swappable components. Power must be removed from the system prior to opening the chassis for service.
- Only low-profile (1.2 in or 30.48 mm) DIMMs can be used in the server chassis.
- Processor fans are not supported and are not needed in the server chassis. The fan pack, power supply fans and passive processor heatsink provide the necessary cooling needed for the system. Using a processor fan in this chassis may cause server management to incorrectly monitor the system fans.
- When the floppy drive or CD-ROM drive is used, it is NOT hot-swappable. The system must be powered down before the module is inserted or removed.
- The CPU/memory air duct must be in place during all system operation.
- System fans are not hot-swappable.
- Use of the shipping screw found on the front edge of the top cover is optional.
- To improve system EMI levels, shielded LAN cables must be used.

Glossary

Word / Acronym	Definition
ACA	Australian Communication Authority
ANSI	American National Standards Institute
BMC	Baseboard Management Controller
CMOS	Complementary Metal Oxide Silicon
D2D	DC-to-DC
EMP	Emergency Management Port
FP	Front Panel
FRB	Fault Resilient Boot
FRU	Field Replaceable Unit
LPC	Low-Pin Count
MTBF	Mean Time Between Failure
MTTR	Mean Time to Repair
OTP	Over Temperature Protection
OVP	Over Voltage Protection
PFC	Power Factor Correction
PMC	Platform Management Controller
PSU	Power Supply Unit
PWT	Processor Wind Tunnel
RI	Ring Indicate
SCA	Single Connector Attachment
SDR	Sensor Data Record
SE	Single-Ended
UART	Universal Asynchronous Receiver Transmitter
USB	Universal Serial Bus
VCCI	Voluntary Control Council for Interference